MOTION TECHNOLOGY

ROTARY UNION
DESIGN GUIDE

Duff-Norton®
Columbus McKinnon Engineered Products

ROTARY UNION TABLE OF CONTENTS

PRODUCT DISCLAIMER

The function of a rotating union is to separate the working media from the environment. Duff-Norton rotating unions are contacting seal type rotating unions and will allow leakage to some degree, as will all similarly designed and manufactured products. It is important to note the leakage of rotating unions will increase over time as the contacting seals wear. All persons specifying, installing and operating the rotating union must take note of this potential risk. The information in this catalog is supplied upon the condition the persons using Duff-Norton products will make their own determination whether this leakage may be dangerous, unsafe or cause damage of any nature whatsoever.

ROTARY UNION SELECTION GUIDE 4

ROTARY UNION APPLICATION ANALYSIS FORM 5

GENERAL PURPOSE ROTARY UNIONS

- 300 Series Small Envelope Rotary Unions 8
- 600 Series General Purpose Rotary Unions 10
- 805 Series General Purpose Rotary Unions 12
- **NEW DWA Series** General Purpose, Non-Corrosive Rotary Union 16
- 5000 Series Stainless Steel General Purpose Rotary Unions 18
- 9000 Series General Purpose Rotary Unions 24

STEAM & HOT OIL ROTARY UNIONS

- 2000 Series Shock and Vibration Resistant Rotary Unions 32
- 8000 Series Steam and Hot Oil Rotary Unions 36
- 9000G Series High Temperature Rotary Unions 42

MULTI-PORT ROTARY UNIONS

- HPMC/HSMC Series Multi-Port Rotary Unions (up to 8 ports) 46
- 1600 Series Two Port Rotary Unions 50
- 1650 Series Two Port Rotary Unions 52

Improved with models added

NOTE

Duff-Norton has made every effort to ensure that the information contained in the publication is accurate and reliable. Determining the suitability of our products for specific applications is the user's responsibility.

In no event may Duff-Norton be held responsible for unsafe operating practices of those employing Duff-Norton equipment. Users must be knowledgeable of the rotating union application and the product must never be operated outside the operating parameters given throughout this design guide. Duff-Norton rotary unions must not be used on media not specified in this design guide. If one is unsure about the safety of operating a rotating union in a particular application, it is strongly advised to contact Duff-Norton Engineering for assistance in determining suitability in the application.

SPECIALTY ROTARY UNIONS

500 Series Around The Shaft Rotary Union 54

SWIVELS

1100 Series Slow Rotation Swivel 60
1102 Series Slow Rotation Swivel 64
1200 Series Small Envelope Swivel 68
1300 Series Flanged Swivel 70
1700 Series High Pressure Swivel 72
1900 Series High Pressure Swivel 74

ENGINEERING SECTION

Rotary Union Design 76
Technical Data 77
Recommended Hose Installation 78

WARRANTY 78

TERMS OF SALE 79

⚠ WARNING

The equipment shown in this catalog is intended for industrial use only and should not be used to lift, support, or otherwise transport people unless you have written statement from Duff-Norton, which authorizes the specific actuator used in your applications as suitable for moving people.

SELECTION GUIDE

USERS GUIDE
FOR SELECTING A ROTARY UNION

What is a Rotary Union?

A Rotary Union transfers media (water, steam, air, oil, hydraulic fluid, etc) from a stationary source to rotating machinery, such as a drum or an indexing table.

How do I choose the best Rotary Union for my process?

Tell us about your process. We need to know:

- Type of fluid or gas to be conveyed (Media)
- Pressure (PSI)
- Temperature (°F)
- Speed (RPM)
- Shaft connection (Thread size and type or flange size)
- Flow rate of media (GPM)
- Flow passage: Mono flow or Dual flow (if Dual flow: Stationary or Rotating Siphon Pipe or Tube)

Rotary Union Selection Guide

Media					Pressure (psi)	Temperature (°F)	Speed (RPM)	Thread Size (Inch)	Rotary Union Series	Catalog Page
Water	Steam	Hot Oil	Air	Hydraulic Fluid						
YES			YES	YES	117	250	3500	1/8 to 1/4	300 Series	8
YES			YES	YES	3625	250	1500	1/4 to 1	600 Series	10
YES			YES	YES	435	320	5000	1/4 to 1	805 Series	12
YES				YES	200	212	3500	1/4 to 2	DWA Series	16
YES	YES	YES	YES		750	300	1000	1/4 to 2	5000 Seried	18
YES	YES	YES			250	375	700	1/4 to 3	9000 Series	24
YES		YES	YES		150	375	500	2 to 4 Flange	2000 Series	32
	YES	YES			175	600	600	1/2 to 4	8000 Series	36
YES	YES	YES			250	600	700	1/2 to 3	9000G Series	42
YES			YES	YES	5880	248	3000	1/8 to 1-1/4	HPMS/HSMC	46
YES			YES	YES	2900	250	1500	1/4 to 1	1600 Series	50
YES			YES	YES	2900	250	1500	1/4 to 1	1650 Series	52
YES			YES	YES	5800	392	3000	1/4 to 1/2	500 Series	54
YES			YES	YES	725	392	60	1/4 to 3	1100 Series	60
YES			YES	YES	1160	392	90	1/4 to 6	1102 Series	64
YES			YES	YES	5075	392	Swivel	1/4 to 2	1200 Series	68
YES			YES		290	392	Swivel	2 to 12	1300 Series	70
YES			YES	YES	5075	248	80	1/4 to 3	1700 Series	72

www.duffnorton.com • Ph: (800) 477-5002 • Fax: (704) 588-1994

ROTARY UNION
APPLICATION ANALYSIS FORM

Duff-Norton engineers will be pleased to make recommendations for your specific requirements.
Complete this form and mail or fax it to the Duff-Norton Company. There is no obligation for this service.
Use a separate sheet to sketch your application, or send us your design drawings in complete confidence.

Name: _____ **Company:** _____

Address: _____

Email Address: _____

Phone Number: _____ **Ext:** _____ **Fax:** _____

1. **Size Required** _____ **or Estimated Flow Required:** _____
2. **Connection** (check one): ☐ Threaded Shaft ☐ Quick Release ☐ Flange Mount
   If Threaded Shaft, specify
   Type: ☐ NPT ☐ UNF ☐ BSP ☐ ISO228 ☐ Metric
   Direction: ☐ Left Hand ☐ Right Hand
   If Flange Mount, then refer to Flange Mountings in catalog and on website
3. **Pressure:** _____ psi or _____ bar Temperature: _____ F° or _____ C°
   Does pressure or temperature fluctuate or change during operation? If so, please give maximum, minimum and description: _____
4. **Speed:** _____ RPM or _____ Feet Per Minute & Diameter of Roll: _____
   Does direction alternate? ☐ Yes ☐ No
5. **Media to be used:** ☐ Water ☐ Steam ☐ Air ☐ Hot Oil ☐ Hydraulic Oil (specify) _____
   ☐ Other (specify) _____
   Is medium abrasive, corrosive, flammable, explosive or toxic? If so, please explain: _____
6. **Check one:** ☐ Single Flow ☐ Dual Flow ☐ Multiport
   If Dual Flow, specify siphon size: _____ **& type:** ☐ Stationary* ☐ Rotating
   ***If Stationary siphon, specify connection type:**
   ☐ Threaded** ☐ Tube
   ****If Threaded, specify type:** ☐ NPT ☐ ISO228
   ☐ Other _____
   If Multiport, specify number of ports: _____ **& Port Size:** _____
7. **How many are being used now?** _____ **Potential Usage?** _____
8. **Is competitive Joint being used now?** _____ **Manufacturer: Model or Type:** _____
   Any problems? Please describe _____
9. **Any other information regarding application and requirements of the rotating joint. Send sketches or drawings if available:** _____

Duff-Norton®

To mail please send completed sheet to:
Duff-Norton - Application Engineers
P.O. Box 7010, Charlotte, NC 28241
To Fax or Email please send to:
704-588-1994 • duffnorton@cmworks.com

Duff-Norton UL REGISTERED FIRM ISO 9001 #A2574

⚠ WARNING

Improper use can result in personal injury. To avoid injury:
- Do not use actuators to lift, support, or transport people, without written approval from Duff-Norton.
- Read all product warnings and operating instructions.

ROTARY UNION APPLICATIONS

Duff-Norton products and systems can be found in industries ranging from aluminum, steel, agriculture, construction, communications, energy, food & beverage and industrial machinery.

Automotive Assembly

The robotic arms are used to apply urethane adhesive on windshields and rear windows.

Application: Robitic Arm
Unit used: 1900 Series High Pressure Swivel
Media: Urethane adhesive
For product details see pages 74-75

Aluminum Can Forming

The 600 Series rotary union transfers grease under high pressure in an aluminum beverage can forming machine. This machine crimps the top edge of the aluminum can.

Application: Aluminum Can Forming
Unit used: 600 Series Rotary Union
Media: High pressure grease
For product details see pages 10-11

Printing Industry

- Ink-feed Rolls
- Ink Vibrator Rolls
- Chill Rolls
- Unwind Stands

Rubber Industry

- Banbury Mixers
- Extrusion Machines
- Tubers
- Calendars

Steel Industry

- Run Out Tables
- Benders
- Reduction Mills
- Un-Coilers
- Re-Coilers

Textile Industry

- Breaker Rolls
- Slashers
- Dry Can Ranges
- Embossers

Kaolin Processing

The calciner removes the kaolin from the kiln at around 1100°F and cools it down to 140°F in preparation for packaging. The kaolin comes from the kiln in a powder form, while cooling water runs through screw conveyors which are hollow on the inside.

Application: Kaolin Production
Unit used: 8000 Series Rotary Union
Media: Cooling Water
For product details see pages 36-41

Cheese Production

An ammonia cooling wheel is used in a cheese manufacturing clean room. The cooling wheel extracts the cheese “curd” and chills it into a solid form, which is then sliced and individually wrapped with plastic. This application uses a sophisticated leak detection system that automatically shuts the machine off if a leak is detected.

Application: Cheese Production
Unit used: 9000G
Media: Ammonia
For product details see pages 24-31

Tire Industry

- Banbury Mixers
- Warming Mills
- Feed Mills
- Sizing Mills
- Custom Tire Processing

Plastic Industry

- Extrusion Machines
- Polishing Mills
- Re-Winders
- Dicers
- Scrap Recyclers

Food Industries

- Cerial Processing
- Flaking Mills
- Shredders
- Puffers
- Cookers

Construction

- Road surfacing
- Forklift
- Logging
- Back Hoe
- Excavator

ROTARY UNION

300 SERIES

SMALL ENVELOPE - GENERAL PURPOSE

Operating Parameters

MEDIA	PRESSURE*
Air, Water	117 psi
TEMPERATURE*	**SPEED***
250° F	3,500 RPM
THREADS	**MATERIAL**
• 1/8 inch to 1/4 inch NPT • Machine Thread • BSP & BSPP Available	Nickel Plated Steel

* See Performance Charts for details

FEATURES & BENEFITS

High Speed Air and Water Applications

- Ideal for high speed air and water applications with space constraints.

Corrosion Resistant

- All steel parts are nickel plated steel for corrosion resistance.

Small Profile

- Small envelope dimensions make the 300 Series suitable for use in applications with space constraints.

Part Numbers - 300 Series Rotary Unions

Shaft Thread (A)	Right Hand Thread		Left Hand Thread	
	Part Number	Description	Part Number	Description
1/8 NPT	770359C	R3S3747KNPT	770358C	L3S3747KNPT
1/4 NPT	770357C	R3S2086KNPT	770356C	L3S2086KNPT
5/8-18 UNF	770361C	R3S3862KUNF	770360C	L3S3862KUNF

*E (Seal) 731271C

Dimensions - 300 Series Rotary Unions (inch)

Shaft Thread (A)	B	Inlet C (NPT)	DN	F	G	H	I
1/8 NPT	0.4	1/8 (RH)	0.15	2	1.7	.75	1.5
1/4 NPT	0.5		0.23				
5/8-18 UNF	0.4		0.23				

*E (Seal) 731271C

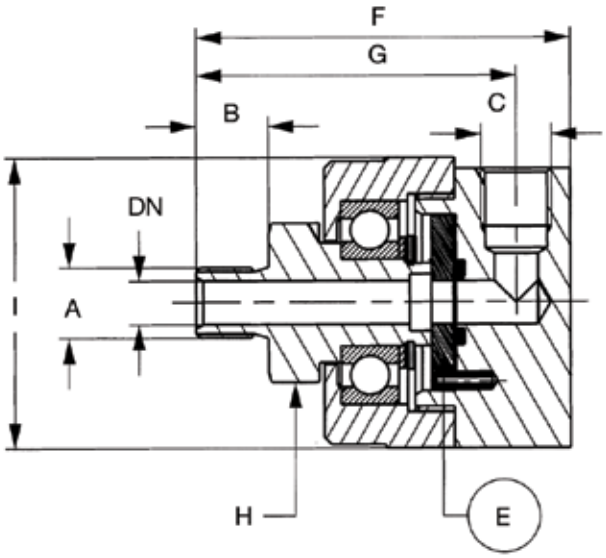

Performance Charts

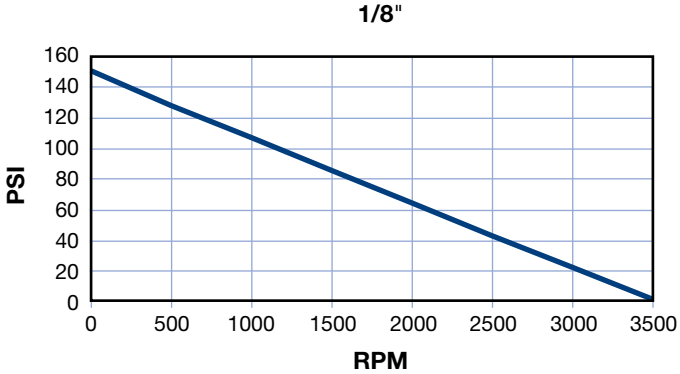

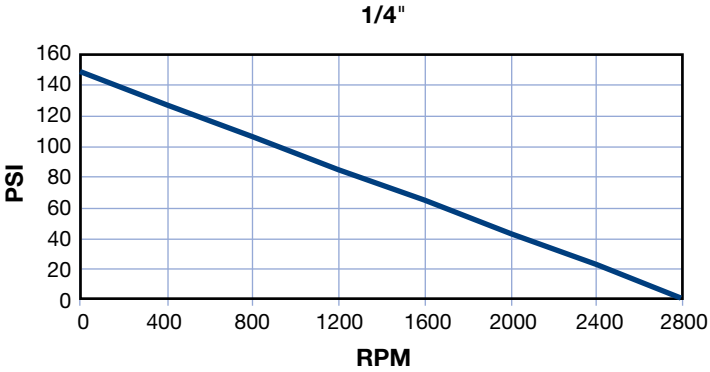

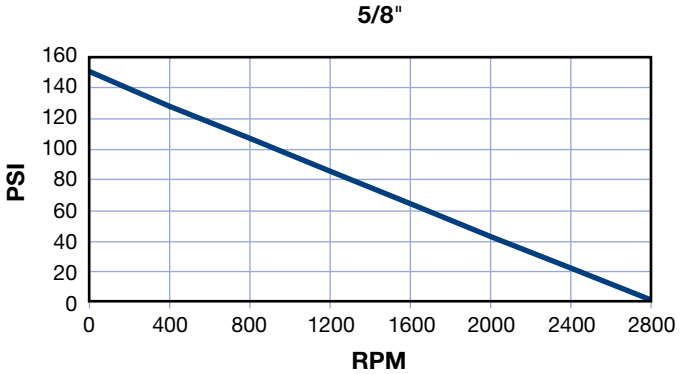

Air & Water

ROTARY UNION

600 SERIES

GENERAL PURPOSE

Operating Parameters

MEDIA	PRESSURE*
Air, Water, Hydraulic Fluid	3,625 psi
TEMPERATURE*	**SPEED***
250° F	1500 RPM
THREADS	**MATERIAL**
• 1/4 inch to 1 inch NPT or MT • BSP & BSPP Available	Nickel treated carbon steel construction. Stainless steel models also available.
CONFIGURATION OPTIONS	
Mono Flow Configurations	

* See Performance Charts for details

FEATURES & BENEFITS

Two Configurations Offered

- Either axial (straight through) nickel plated housing or radial (90 degree) inlet with aluminum housing for maximum flexibility.

High Speeds

- Suitable for speeds up to 1,500 RPM.

Wide Range Of Sizes

- Available in sizes from 1/4” to 1” NPT & MT.

Bi-Directional Rotation

- The 600 Series is equipped with a GR seal design that allows bi-directional rotation.

Part Numbers - 600 Series Rotary Unions

Nominal Pipe Size	Shaft Thread (A)	Axial Inlet				Radial Inlet			
		Right Hand Thread		Left Hand Thread		Right Hand Thread		Left Hand Thread	
		Part Number	Description	Part Number	Description	Part Number	Description	Part Number	Description
1/4	1/4 NPT	770363C	R613JKANPT	770362C	L613JKANPT	770383C	R713JKRNPT	770382C	L713JKRNPT
	5/8-18 UNF	770365C	R613MKAUNF	770364C	L613MKAUNF	770385C	R713MKRUNF	770384C	L713JKRNPT
3/8	3/8 NPT	770367C	R617JKANPT	770366C	L617JKANPT	770387C	R717JKRNPT	770386C	L717JKRNPT
	5/8-18 UNF	770369C	R617MKAUNF	770368C	L617MKAUNF	770389C	R717MKRUNF	770388C	L717MKRUNF
1/2	1/2 NPT	770371C	R621JKANPT	770370C	L621JKANPT	770391C	R721JKRNPT	770390C	L721JKRNPT
	3/4-16 UNF	770373C	R621MKAUNF	770372C	L621MKAUNF	770393C	R721MKRUNF	770392C	L721MKRUNF
3/4	3/4 NPT	770375C	R627JKANPT	770374C	L627JKANPT	770395C	R727JKRNPT	770394C	L727JKRNPT
	3/4-16 UNF	770377C	R627MKAUNF	770376C	L627MKANPT	770397C	R727MKRUNF	770396C	L727MKRUNF
1	1 NPT	770379C	R634JKANPT	770378C	L634JKANPT	770399C	R734JKRNPT	770398C	L734JKRNPT
	1-1/2-12 UNF	770381C	R634MKAUNF	770380C	L634MKAUNF	770401C	R734MKRUNF	770400C	L734MKRUNF

www.duffnorton.com
Ph: (800) 477-5002 • Fax: (704) 588-1994

Dimensions - 600 Series Axial Inlet (inch)

Nominal Pipe Size	Shaft Thread (A)	B	Inlet Thread (C) NPT	DN	Seal Design (E)	Overall Length (F)	Flats (H)	Outside Dia. (I)
1/4	1/4 NPT 5/8-18 UNF	.47	1/4	.19	466787C	2.79	.74	1.49
3/8	3/8 NPT 5/8-18 UNF	.43	3/8	.31	466789C	3.14	1.06	1.77
1/2	1/2 NPT 3/4-16 UNF	.55	1/2	.51	466792C	4.05	1.25	2.36
3/4	3/4 NPT 3/4-16 UNF	.70	3/4	.70	466794C	5.35	1.37	2.95
1	1 NPT 1-1/2-12 UNF	.74	1	.86	466792C	6.41	1.73	3.70

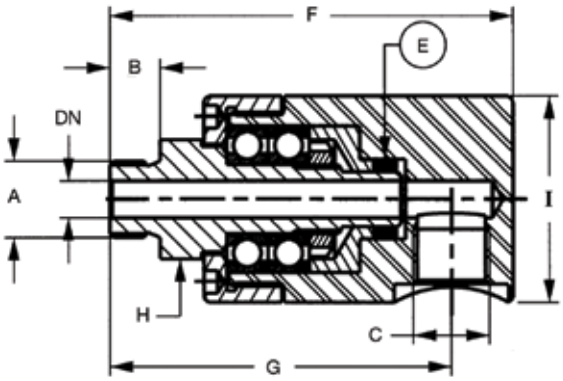

Dimensions - 600 Series Radial Inlet (inch)

Nom. Pipe Size	Shaft Thread (A)	B	Inlet Thread (C) NPT	DN	Seal Design (E)	Overall Length (F)	Radial Design (G)	Flats (H)	Outside Dia. (I)
1/4	1/4 NPT 5/8-18 UNF	.47	1/4	.19	466787C	2.79	2.26	.74	1.49
3/8	3/8 NPT 5/8-18 UNF	.43	3/8	.31	466789C	3.14	2.93	1.06	1.77
1/2	1/2 NPT 3/4-16 UNF	.55	1/2	.51	466792C	4.05	3.48	1.25	2.36
3/4	3/4 NPT 3/4-16 UNF	.70	3/4	.70	466794C	5.35	4.56	1.37	2.95
1	1 NPT 1-1/2-12 UNF	.74	1	.86	466792C	6.41	1.73	1.73	3.70

Performance Charts

1/4"

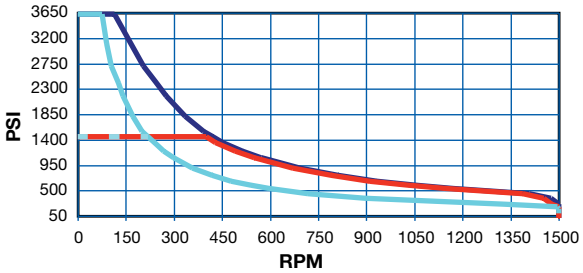

3/8"

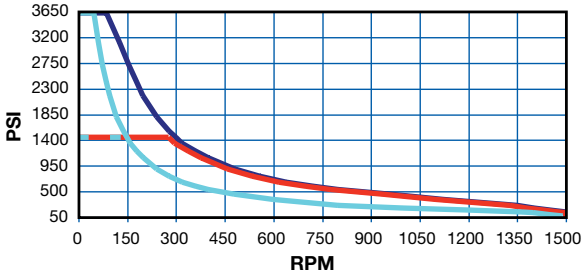

1/2"

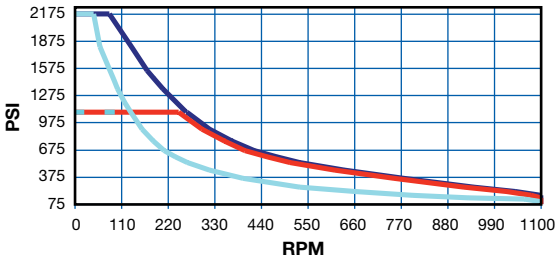

3/4"

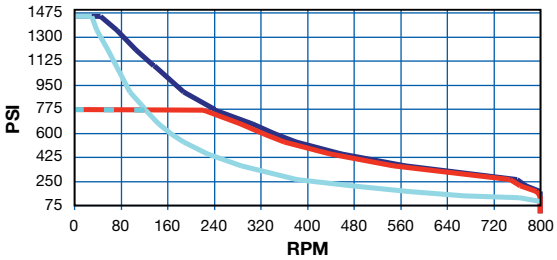

1"

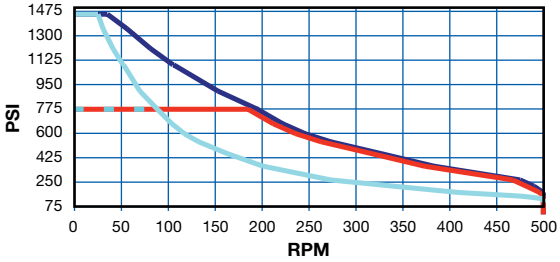

Performance charts are for oil, grease or similar lubricating media. For media such as water or air, reduce the maximum recommended speed as follows:

For water, multiply speed by 0.67
For air, multiply speed by 0.33

Maximum recommended speeds are found on the horizontal axis.

- Steel Axial Connection
- Steel Radial Connection
- Stainless Steel
- Stainless Steel Radial Connection

ROTARY UNION

805 SERIES

GENERAL PURPOSE

Operating Parameters

MEDIA	PRESSURE*
Air, Hydraulic Fluid, Water, Non-Toxic Gasses, Oil	435 psi (725 psi with seal option E2)
TEMPERATURE*	**SPEED***
350° F	5,000 RPM
THREADS	**MATERIAL**
• 1/4 inch to 1 inch NPT • MT & Metric • BSP & BSPP Available	Aluminum housing with a stainless steel shaft. Also available in al stainless steel construction
CONFIGURATION OPTIONS	
Mono Flow and Dual Flow configurations available	

* See Performance Charts for details

FEATURES & BENEFITS

Flexible

- Suitable for a wide range of applications.

Mono Flow Models

- Offered in sizes 1/4" to 1".

Dual Flow Models

- Offered in sizes 1/2" to 1".

Seal Options Two seal options are offered:

- **Seal Option E1** (Standard)
  The carbon graphite seal ring against ceramic face ring design can be used at pressures up to 435 psi.
- **Seal Option E2** (Optional)
  The stainless steel seal ring against ceramic face ring design can be used at pressures up to 725 psi.

Part Numbers - 805 Series Rotary Union • Mono Flow

Nominal Pipe Size	Shaft Thread (A)	Right Hand		Left Hand	
		Part Number	Description	Part Number	Description
1/4	1/4 NPT	760150C	R813SR5NPT	760155C	L813SR5NPT
	1/4 BSP	760152C	R813SR5BSP	760157C	L813SR5BSP
	1/4 BSPP	760153C	R813SR5BSPP	760158C	L813SR5BSPP
	5/8-18 UNF	760151C	R813SR5UNF	760156C	L813SR5UNF
	M14xP1.5	760154C	R813SR5M	760159C	L813SR5M
3/8	3/8 NPT	760170C	R817SR5NPT	760175C	L817SR5NPT
	3/8 BSP	760172C	R817SR5BSP	760177C	L817SR5BSP
	3/8 BSPP	760173C	R817SR5BSPP	760178C	L817SR5BSPP
	5/8-18 UNF	760171C	R817SR5UNF	760176C	L817SR5UNF
	M16xP1.5	760174C	R817SR5M	760179C	L817SR5M
1/2	1/2 NPT	760190C	R821SR5NPT	760195C	L821SR5NPT
	1/2 BSP	760192C	R821SR5BSP	760197C	L821SR5BSP
	1/2 BSPP	760193C	R821SR5BSPP	760198C	L821SR5BSPP
	3/4-16 UNF	760191C	R821SR5UNF	760196C	L821SR5UNF
	M22xP1.5	760194C	R821SR5M	760199C	L821SR5M
3/4	3/4 NPT	760210C	R827SR5NPT	760215C	L827SR5NPT
	3/4 BSP	760212C	R827SR5BSP	760217C	L827SR5BSP
	3/4 BSPP	760213C	R827SR5BSPP	760218C	L827SR5BSPP
	1-1/16-12 UNF	760211C	R827SR5UNF	760216C	L827SR5UNF
	M25xP1.5	760214C	R827SR5M	760219C	L827SR5M
1	1 NPT	760230C	R834SR5NPT	760235C	L834SR5NPT
	1 BSP	760232C	R834SR5BSP	760237C	L834SR5BSP
	1 BSPP	760233C	R834SR5BSPP	760238C	L834SR5BSPP
	1-1/2-12 UNF	760231C	R834SR5UNF	760236C	L834SR5UNF
	M35xP1.5	760234C	R834SR5M	760239C	L834SR5M

Part Numbers - 805 Series Rotary Union • Dual Flow

Nominal Pipe Size	Shaft Thread (A)	Right Hand Thread		Left Hand Thread	
		Part Number	Description	Part Number	Description
1/2	1/2 NPT	760250C	R921SR5NPT	760255C	L921SR5NPT
	1/2 BSP	760252C	R921SR5BSP	760257C	L921SR5BSP
	1/2 BSPP	760253C	R921SR5BSPP	760258C	L921SR5BSPP
	3/4-16 UNF	760251C	R921SR5UNF	760256C	L921SR5UNF
	M22xP1.5	760254C	R921SR5M	760259C	L921SR5M
3/4	3/4 NPT	760270C	R927SR5NPT	760275C	L927SR5NPT
	3/4 BSP	760272C	R927SR5BSP	760277C	L927SR5BSP
	3/4 BSPP	760273C	R927SR5BSPP	760278C	L927SR5BSPP
	1-1/16-12 UNF	760271C	R927SR5UNF	760276C	L927SR5UNF
	M25xP1.5	760274C	R927SR5M	760279C	L927SR5M
1	1 NPT	760290C	R934SR5NPT	760295C	L934SR5NPT
	1 BSP	760292C	R934SR5BSP	760297C	L934SR5BSP
	1 BSPP	760293C	R934SR5BSPP	760298C	L934SR5BSPP
	1-1/2-12 UNF	760291C	R934SR5UNF	760296C	L934SR5UNF
	M35xP1.5	760294C	R934SR5M	760299C	L934SR5M

Dimensions - 805 Series Rotary Union • Mono Flow (Inch)

Nominal Pipe Size	Shaft Thread (A)	Inlet Thread (Q)*	Shaft Thread Length (B)	DN	F	G	H	I	K	R	S
1/4	1/4 NPT	NPT	.43	.31	3.14	.74	.86	1.49	2.55	1.73	.76
	1/4 BSP	BSP									
	1/4 BSPP	BSPP			3.34	.94			2.75		
	5/8-18 UNF	NPT									
	M14xP1.5	BSP									
3/8	3/8 NPT	NPT	.43	.39	3.42	.82	1.02	1.65	2.71	1.81	.78
	3/8 BSP	BSP									
	3/8 BSPP	BSPP			3.62	1.02			2.91		
	5/8-18 UNF	NPT									
	M16xP1.5	BSP									
1/2	1/2 NPT	NPT	.55	.55	4.17	.98	1.25	2.16	3.38	2.36	1.02
	1/2 BSP	BSP									
	1/2 BSPP	BSPP			4.37	1.18			3.58		
	3/4-16 UNF	NPT									
	M22xP1.5	BSP									
3/4	3/4 NPT	NPT	.62	.78	4.80	1.10	1.37	2.48	3.74	2.91	1.29
	3/4 BPS	BSP									
	3/4 BPSS	BSPP			5.19	1.49			4.13		
	1-1/16-12 UNF	NPT									
	M25xP1.5	BSP									
1	1 NPT	NPT	.74	.98	5.59	1.22	1.61	2.75	4.25	3.14	1.33
	1 BSP	BSP									
	1 BSPP	BSPP			5.98	1.61			4.64		
	1-1/2-12 UNF	NPT									
	M35xP1.5	BSP									

* All inlet threads are right hand threads

Dimensions - 805 Series Rotary Union • Dual Flow (Inch)

Nominal Pipe Size	Shaft Thread (A)	Inlet Thread (Q)*	Shaft Thread Length (B)	DN	F	G	H	I	J	K	L (NPT)	R	S	T (NPT)
1/2	1/2 NPT	NPT	.55	.55	4.17	.98	1.25	2.16	5.23	3.38	1/8	2.36	1.02	.50
	1/2 BSP	BSP												
	1/2 BSPP	BSPP			4.37	1.18			5.43	3.58				
	3/4-16 UNF	NPT												
	M22xP1.5	BSP												
3/4	3/4 NPT	NPT	.62	.78	4.80	1.10	1.37	2.48	5.94	3.74	1/4	2.91	1.29	.75
	3/4 BPS	BSP												
	3/4 BPSS	BSPP			5.19	1.49			6.33	4.13				
	1-1/16-12 UNF	NPT												
	M25xP1.5	BSP												
1	1 NPT	NPT	.74	.98	5.59	1.22	1.61	2.75	6.85	4.25	3/8	3.14	1.33	1
	1 BSP	BSP												
	1 BSPP	BSPP	.70		5.98	1.61			7.24	4.64				
	1-1/2-12 UNF	NPT												
	M35xP1.5	BSP												

* All inlet threads are right hand threads

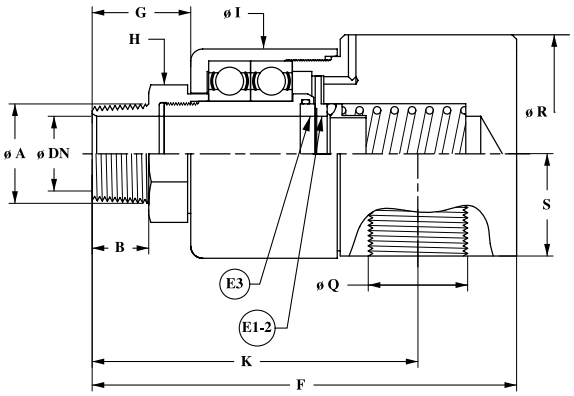

Mono Flow

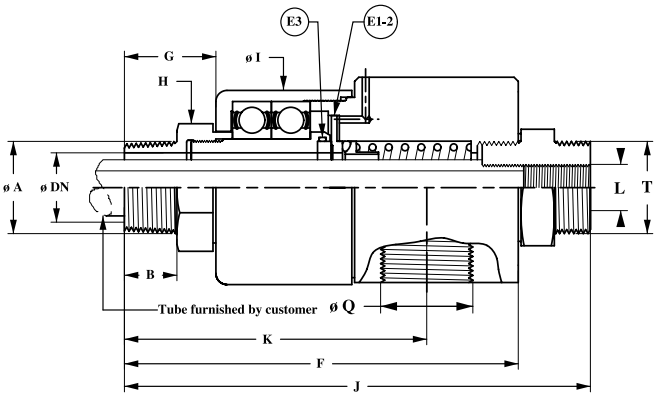

Dual Flow

Performance Charts

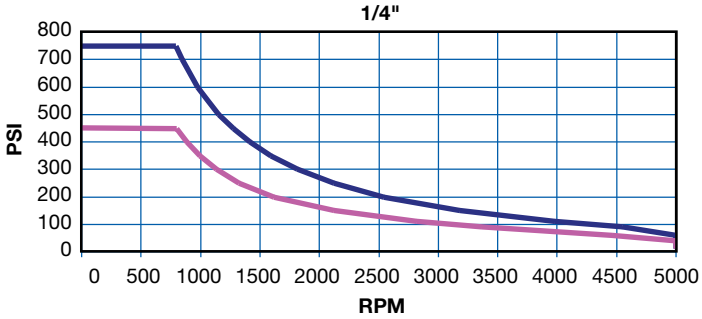

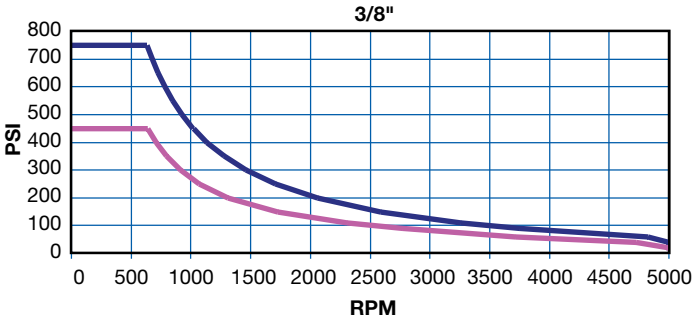

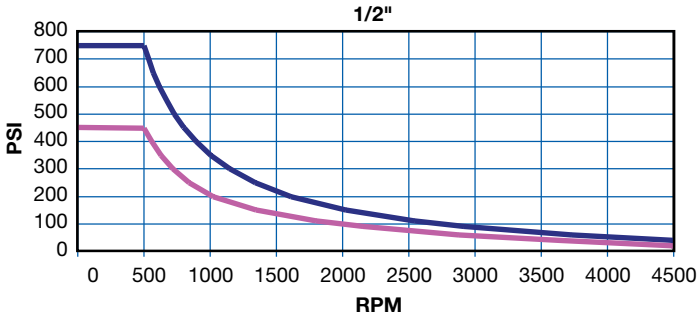

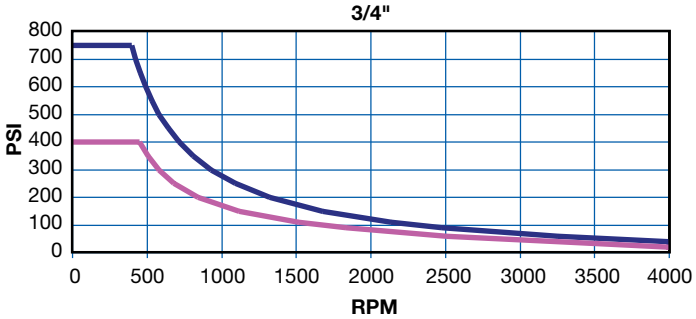

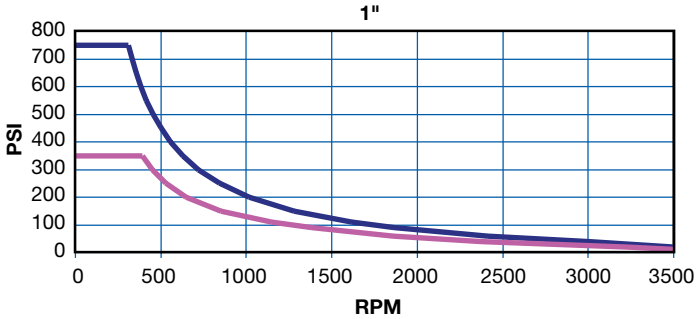

Stainless Steel

Standard Materials

ROTARY UNION

DWA SERIES

GENERAL PURPOSE

NEW

Operating Parameters

SPEED	TEMPERATURE
• 1750 RPM, • 1750 - 3500 RPM: Reduce pressure rating 20%	• 158°F (70°C) • 159°F (71°C - 100°C): Reduce pressure rating 15%
PRESSURE	**MEDIA**
• 200 psi (1.38 MPa) • 180 psi - 2 inch size only (1.24 MPa)	Water, non-corrosive fluids and oils
THREADS	
• 1/2 Inch to 2 Inch NPT • BSP & BSPP Available	

FEATURES & BENEFITS

Long Life

- Silicon carbide / carbon graphite seal faces provide long service life.

Smooth Running

- High precision ball bearings for smooth running and long life, even at high speeds.

Internal Protection

- Internal bearing protection and vented body to prevent lubricant washout.

Non-corrosive

- Aluminum housing with stainless steel shaft.

Maintenance Free

- No maintenance required.

Economical

- Cost effective for general purpose applications.

Performance Charts

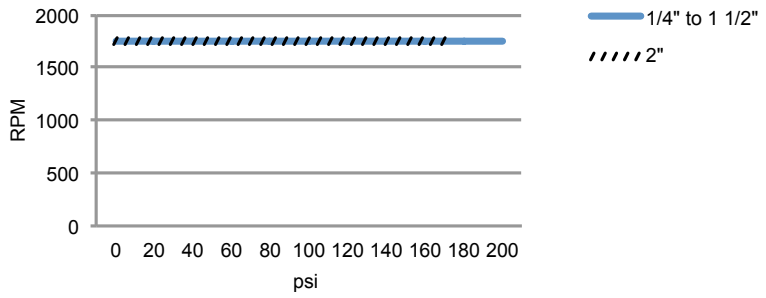

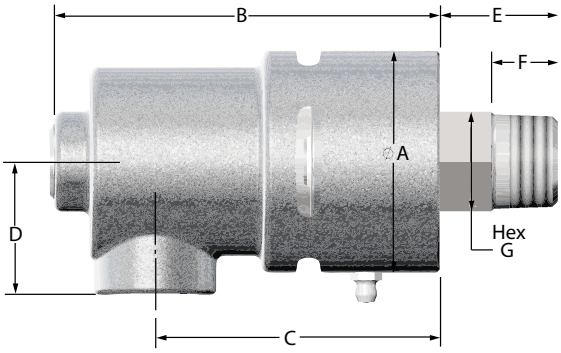

Dimensions - DWA Series • Mono Flow

Thread Size		Part Numbers		Dimensions - inch (cm)						
		Right Hand	Left Hand	A	B	C	D	E	F	G
1/2 Inch	NPT	192003036	192003037	2.31 (5.87)	4.03 (10.24)	3.03 (7.70)	1.30 (3.30)	1.23 (3.12)	0.75 (1.91)	1.00 (2.54)
	BSP	192011116	192011118							
	BSPP	192011119	192011120							
3/4 Inch	NPT	192003038	192003039	2.50 (6.35)	4.35 (11.05)	3.21 (8.15)	1.50 (3.81)	1.33 (3.38)	0.75 (1.91)	1.12 (2.84)
	BSP	192011121	192011122							
	BSPP	192011123	192011124							
1 Inch	NPT	192003040	192003041	3.25 (8.26)	4.93 (12.52)	3.53 (8.97)	1.75 (4.45)	1.50 (3.81)	0.94 (2.39)	1.50 (3.81)
	BSP	192011125	192011126							
	BSPP	192011127	192011128							
1-1/4 Inch	NPT	192044752	192044753	3.62 (9.19)	5.60 (14.22)	4.03 (10.24)	1.87 (4.75)	2.03 (5.15)	1.01 (2.57)	1.75 (4.45)
	BSP	Contact Factory								
	BSPP									
1-1/2 Inch	NPT	192003042	192003043	4.00 (10.16)	5.91 (15.01)	4.16 (10.57)	2.20 (5.59)	2.30 (5.84)	1.06 (2.69)	2.25 (5.72)
	BSP	192011129	192011130							
	BSPP	192011131	192011132							
2 Inch	NPT	192003044	192003045	4.50 (11.43)	6.32 (16.05)	4.38 (11.13)	2.45 (6.22)	2.61 (6.63)	1.12 (2.84)	2.50 (6.35)
	BSP	192011133	192011134							
	BSPP	192011135	192011136							

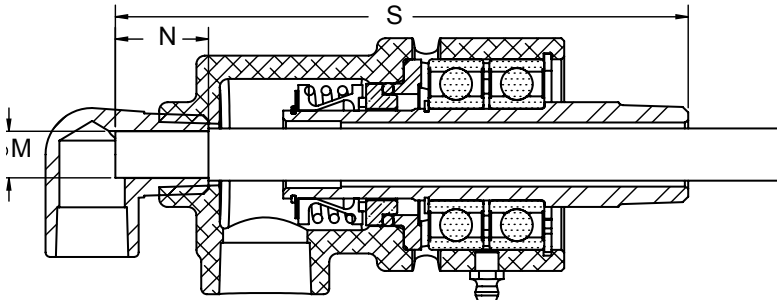

Dimensions & Elbow Part Numbers - DWA Series • Dual Flow

Nominal Pipe Size	Siphon Size	Elbows for Stationary Siphon Tubes				Elbows for Rotating Siphon Tubes			
		Part Number	M	N	Length S	Part Number	M	N	Length S
1/2 Inch	1/8 Inch NPT	465408C	3/8 (0.95)	1.00 (2.54)	5.66 (14.38)	451245C	0.370/0.371 (0.940/0.942)	1.00 (2.54)	5.84 (14.83)
	3/8 Inch Dia. Tubing	465408C			5.84 (14.83)				
3/4 Inch	1/8 Inch NPT	465401C	1/2 (1.27)	1.00 (2.54)	5.97 (15.16)	451243C	0.495/0.496 (1.257/1.260)	1.00 (2.54)	6.15 (15.62)
	1/4 Inch NPT	465402C			6.11 (15.52)				
	1/2 Inch Dia. Tubing	465404C			6.15 (15.62)				
1 Inch	1/4 Inch NPT	465411C	5/8 (1.59)	1.00 (2.54)	6.85 (17.40)	451246C	0.612/0.619 (1.554/1.572)	1.00 (2.54)	6.89 (17.50)
	3/8 Inch NPT	465412C			6.72 (17.07)				
	5/8 Inch Dia. Tubing	465413C			6.89 (17.50)				
1-1/4	1/2 NPT	465414C	3/4 (19.0)	1.50 (3.81)	7.41 (18.82)	451247C	0.743/0.745 (1.887/1.982)	1.50 (3.81)	7.45 (18.89)
	3/4 Inch Dia. Tubing	465415C			7.45 (18.89)				
1-1/2 Inch	1/2 Inch NPT	465405C	1 (2.54)	1.50 (3.81)	8.45 (21.46)	451244C	0.743/0.745 (1.887/1.982)	1.50 (3.81)	9.02 (22.91)
	3/4 Inch NPT	465406C			8.40 (21.34)				
	1 Inch Dia. Tubing	465407C			9.02 (22.91)				
2 Inch	1/2 Inch NPT	465405C	1 (2.54)	1.50 (3.81)	9.17 (23.29)	451244C	0.998/1.000 (2.535/2.540)	1.50 (3.81)	9.75 (24.77)
	3/4 Inch NPT	465406C			9.12 (23.16)				
	1 Inch Dia. Tubing	465407C			9.75 (24.77)				

NOTE: Elbows with BSP threads available in all sizes - contact the factory for information

ROTARY UNION
5000 SERIES
STAINLESS STEEL - GENERAL PURPOSE

Operating Parameters	
SPEED	**TEMPERATURE**
1,000 RPM (NPT), 3,600 RPM (MT)	300°F (Water), 350°F (Steam), 395°F (Hot Oil)
PRESSURE	**MEDIA**
750 psi (Water), 120 psi (Steam), 100 psi (Hot Oil), 300 psi (Air)	Water, Steam, Hot Oil, Air
THREADS	**MATERIAL**
• 1/4 Inch to 2 Inch NPT • BSP, BSPP & Metric Threads Available	300 Grade Stainless Steel
CONFIGURATION OPTIONS	
Mono Flow and Dual Flow Configurations Available	

* See Performance Charts For Details

MODELS ADDED

FEATURES & BENEFITS

Corrosion Resistant

- 300 Grade stainless steel construction for superior corrosion resistance.

Long Service Life

- Two precision bearings keep the 5000 Series seal faces perfectly aligned to extend the life of the 5000 Series Rotary Union.

Dual Flow Option

- With the addition of an elbow, the 5000 Series can become dual flow.

Balanced Mechanical Seal Design

- The balanced mechanical seal design of the 5000 series allows for optimal operation with a wide variety of media.

Replaceable Cartridge

- Integrated cartridge design makes repairs fast and easy reducing maintenance costs.

Multiple Seal Design Options

- All sizes are available with three seal options for better wear resistance

5000 Series (Standard)

- Carbon graphite against a ceramic coated steel seal design offers long life.

5000 ASM Series (Consult Factory)

- The tungsten carbide face ring against a siliconized graphite seal ring design is used for abrasive applications.
- Duff-Norton's Series 5000ASM features Advanced Seal Materials for abrasive applications, where softer sealing faces are subject to grooving. The ASM seal is a tungsten carbide face ring against a siliconized graphite seal ring, offering unsurpassed protection against grooving in applications where other materials fail.

Part Numbers - 5000 Series Rotary Unions • NPT, UNS, UN Threads • Mono Flow

Nominal Pipe Size	Shaft Thread (A)	5000 Series Standard					
		Right Hand			Left Hand		
		Part Number	Description	Repair Cartridge	Part Number	Description	Repair Cartridge
1/4	1/4 NPT	750625C	R5000P	451671C	750642C	L5000P	451670C
3/8	3/8 NPT	750110C	R5100P	451251C	750109C	L5100P	451250C
	5/8-18 UNF	750142C	R5124P	451253C	750109C	L5124P	451250C
1/2	1/2 NPT	750112C	R5200P	451258C	750111C	L5200P	451257C
	3/4-16 UNF	750147C	R5224P	451260C	750146C	L5224P	451259C
	Quick Release	750150C	Q5200P	451263C	750150C	Q5200P	451263C
3/4	3/4 NPT	750089C	R5300P	451265C	750088C	L5300P	451264C
	1-14 UNS	750152C	R5324P	451267C	750151C	L5324P	451266C
	Quick Release	750155C	Q5300P	451270C	750155C	Q5300P	451270C
1	1 NPT	750114C	R5400P	451272C	750113C	L5400P	451271C
	1-1/2-12 UNF	750157C	R5424P	451274C	750156C	L5424P	451273C
	Quick Release	750160C	Q5400P	451277C	750160C	Q5400P	451277C
1-1/4	1-1/4 NPT	750116C	R5500P	451279C	750115C	L5500P	451278C
	1-3/4-12 UN	750162C	R5524P	451281C	750161C	L5524P	451280C
	Quick Release	750165C	Q5500P	451284C	750165C	Q5500P	451284C
1-1/2	1-1/2 NPT	750118C	R5600P	451286C	750117C	L5600P	451285C
	2-12 UN	750167C	R5624P	451288C	750166C	L5624P	451287C
	Quick Release	750170C	Q5600P	451291C	750170C	Q5600P	451291C
2	2 NPT	750120C	R5700P	451293C	750119C	L5700P	451292C
	2-1/2-12 UN	750172C	R5724P	451295C	750171C	L5724P	451294C
	Quick Release	750175C	Q5700P	451298C	750175C	Q5700P	451298C

Part Numbers - 5000 Series Rotary Unions • Metric Threads • Mono Flow

Nominal Pipe Size	Shaft Thread (A)	5000 Series Standard					
		Right Hand			Left Hand		
		Part Number	Description	Repair Cartridge	Part Number	Description	Repair Cartridge
1/4	1/4-19 BSP	750362C	R5000P-20	451673C	750361C	L5000P-20	451672C
	1/4-19 BSPP	750738C	R5000P-19	451666C	750737C	L5000P-19	451665C
3/8	3/8-19 BSP	750144C	R5100P-20	451255C	750143C	L5100P-20	451254C
	3/8-19 BSPP	750259C	R5100P-19	451311C	750258C	L5100P-19	451310C
M16	16 x P1.5	750377C	R511600P-27	451363C	750376C	L511600P-27	451688C
M18	18 x P1.5	750379C	R511800P-27	451365C	750378C	L511800P-27	451690C
1/2	1/2-14 BSP	750149C	R5200P-20	451262C	750148C	L5200P-20	451261C
	1/2-14 BSPP	750261C	R5200P-19	451313C	750260C	L5200P-19	451312C
M22	22 x P1.5	750381C	R522200P-27	451367C	750380C	L522200P-27	451692C
M25	25 x P1.5	750383C	R522500P-27	451369C	750382C	L522500P-27	451694C
M26	26 x P1.5	750385C	R522600P-27	451371C	750384C	L522600P-27	451696C
3/4	3/4-14 BSP	750154C	R5300P-20	451269C	750153C	L5300P-20	451268C
	3/4-14 BSPP	750244C	R5300P-19	451315C	750243C	L5300P-19	451314C
M30	30 x P1.5	750387C	R533000P-27	451373C	750386C	L533000P-27	451698C
1	1-11 BSP	750159C	R5400P-20	451276C	750158C	L5400P-20	451275C
	1-11 BSPP	750246C	R5400P-19	451317C	750245C	L5400P-19	451316C
M35	35 x P1.5	750389C	R543500P-27	451375C	750388C	L543500P-27	451700C
M42	42 x P1.5	750391C	R544200P-27	451377C	750390C	L544200P-27	451702C
1-1/4	1-1/4-11 BSP	750164C	R5500P-20	451283C	750163C	L5500P-20	451282C
	1-1/4-11 BSPP	750263C	R5500P-19	451319C	750262C	L5500P-19	451318C
M48	48 x P1.5	750393C	R554800P-27	451379C	750392C	L554800P-27	451704C
1-1/2	1-1/2-11 BSP	750169C	R5600P-20	451290C	750168C	L5600P-20	451282C
	1-1/2-11 BSPP	750265C	R5600P-19	451321C	750264C	L5600P-19	451318C
M50	50 x P1.5	750395C	R565000P-27	451381C	750394C	L565000P-27	451706C
2	2-11 BSP	750174C	R5700P-20	451297C	750173C	L5700P-20	451296C
	2-11 BSPP	750267C	R5700P-19	451323C	750266C	L5700P-19	451322C

Models Added

Part Numbers - 5000 ASM Series Rotary Unions • NPT Threads • Mono Flow*

Nominal Pipe Size	Shaft Thread (A)	Right Hand			Left Hand		
		Part Number	Description	Repair Cartridge	Part Number	Description	Repair Cartridge
3/8	3/8 NPT	750505C	R5100PA	451460C	750504C	L5100PA	451459C
1/2	1/2 NPT	750513C	R5200PA	451468C	750512C	L5200PA	451467C
3/4	3/4 NPT	750522C	R5300PA	451477C	750521C	L5300PA	451476C
1	1 NPT	750531C	R5400PA	451486C	750530C	L5400PA	451485C
1-1/4	1-1/4 NPT	750540C	R5500PA	451495C	750539C	L5500PA	451494C
1-1/2	1-1/2 NPT	750549C	R5600PA	451504C	750548C	L5600PA	451503C
2	2 NPT	750558C	R5700PA	451513C	750557C	L5700PA	451512C

* Consult factory to metric threads

ROTARY UNION
5000 SERIES
STAINLESS STEEL - GENERAL PURPOSE

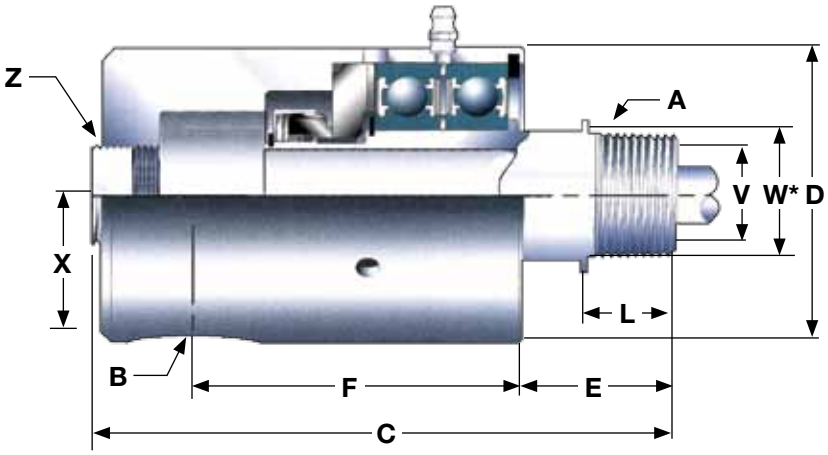

Dimensions - 5000 Series Rotary Unions • NPT, UNS, UN Threads • Mono Flow (In.)

Nominal Pipe Size	Shaft Thread A (Right or Left)	B (NPT)	C	C1	D	E	F	H	J (NPT)	L	V	W (Flats	X	Z (NPT)
1/4	1/4 NPT	3/8	4	5-1/4	1-9/16	1-1/4	2-9/32	1-3/8	3/8	9/16	1/4	5/8	1-1/16	3/8
3/8	3/8 NPT	3/8	4	5-1/4	1-9/16	1-1/4	2-9/32	1-3/8	3/8	5/8	3/8	5/8	1-1/13	3/8
	5/8-19 UNF													
1/2	1/2 NPT	1/2	4-3/4	5-15/16	2-1/16	1-9/32	2-23/32	1-7/16	3/8	3/4	1/2	7/8	1-1/16	3/8
	3/4-16 UNF													
	Quick Release													
3/4	3/4 NPT	3/4	5-1/4	6-1/2	2-5/16	1-13/32	3	1-9/16	1/2	3/4	11/16	1-1/4	1-1/16	1/2
	1-14 UNS													
	Quick Release													
1	1 NPT	1	6-3/16	7-1/2	3-1/8	1-5/8	3-7/16	1-13/16	1/2	15/16	1	1-3/8	1-15/32	3/4
	1-1/2-12 UNF													
	Quick Release													
1-1/4	1-1/4 NPT	1-1/4	7-1/2	9-1/16	3-1/2	2-9/64	4-1/32	2-5/32	3/4	1-1/16	1-1/4	1-5/8	1-1/32	1
	1-3/4-12 UN MT													
	Quick Release													
1-1/2	1-1/2 NPT	1-1/2	8-3/8	9-15/16	4	2-13/32	4-17/32	2-1/4	3/4	1-1/16	1-1/2	1-15/16	1-5/32	1-1/4
	2-12 UN													
	Quick Release													
2	2 NPT	2	9-1/2	11	4-3/8	2-21/32	5-1/16	2-1/2	3/4	1-1/8	1-7/8	2-1/2	1-5/32	1-1/4
	2-1/2-12 UN													
	Quick Release													

www.duffnorton.com • Ph: (800) 477-5002 • Fax: (704) 588-1994

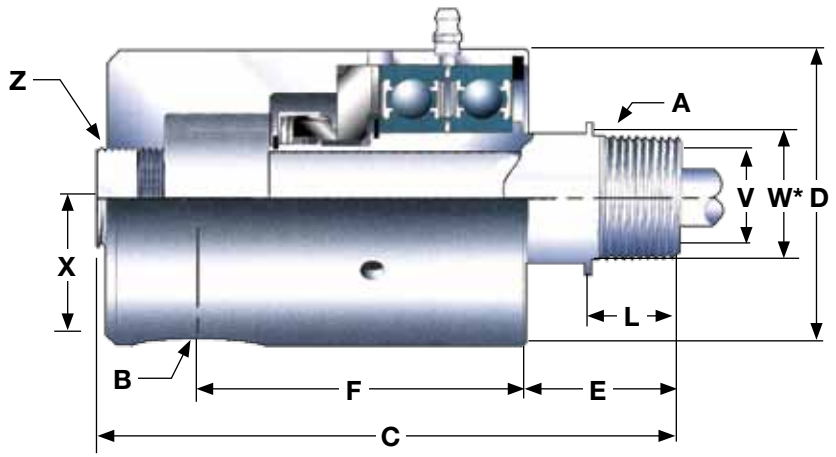

Dimensions - 5000 Series Rotary Unions • Metric Threads • Mono Flow (In.)

Nominal Pipe Size	Shaft Thread A (Right or Left)	B (NPT)	C	C1	D	E	F	H	J (NPT)	L	V	W (Flats	X	Z (NPT)
1/4	1/4-19 BSP	3/8-18	101.6	133.4	39.7	31.8	57.9	34.9	3/8-18	13.9	6.4	16.0	27.0	3/8-18
	1/4-19 BSPP													
3/8	3/8-19 BSP	3/8-18	101.6	133.4	39.7	31.8	57.9	34.9	3/8-18	15.9	9.5	16.0	27.0	3/8-18
	3/8-19 BSPP													
M16	16 x P1.5													
M18	18 x P1.5													
1/2	1/2-14 BSP	1/2-14	120.7	150.8	52.4	32.5	69.1	36.5	3/8-18	19.1	12.7	22.2	27.0	3/8-18
	1/2-14 BSPP													
M22	22 x P1.5													
M25	25 x P1.5													
M26	26 x P1.5													
3/4	3/4-14 BSP	3/4-14	133.4	165.1	58.7	35.7	76.2	39.7	1/2-14	19.1	17.5	31.8	27.0	1/2-14
	3/4-14 BSPP													
M30	30 x P1.5													
1	1-11 BSP	1-11 1/2	157.2	190.5	79.4	41.3	87.3	46.0	1/2-14	23.8	25.4	34.9	37.3	3/4-14
	1-11 BSPP													
M35	35 x P1.5													
M42	42 x P1.5													
1-1/4	1-1/4-11 BSP	1-1/4-11 1/2	190.5	230.2	88.9	54.4	102.4	54.8	3/4-14	27.0	31.8	41.3	26.2	1-11 1/2
	1-1/4-11 BSPP													
M48	48 x P1.5													
1-1/2	1-1/2-11 BSP	1/2-11 1	212.7	252.4	101.6	61.1	115.1	57.2	3/4-14	27.0	38.1	49.2	29.4	1-1/4-11 1/2
	1-1/2-11 BSPP													
M50	50 x P1.5													
2	2-11 BSP	2-11 1/2	241.3	279.4	111.1	67.5	128.6	63.5	3/4-14	28.6	47.6	63.5	29.4	1-1/4-11 1/2
	2-11 BSPP													

ROTARY UNION
5000 SERIES
STAINLESS STEEL - GENERAL PURPOSE

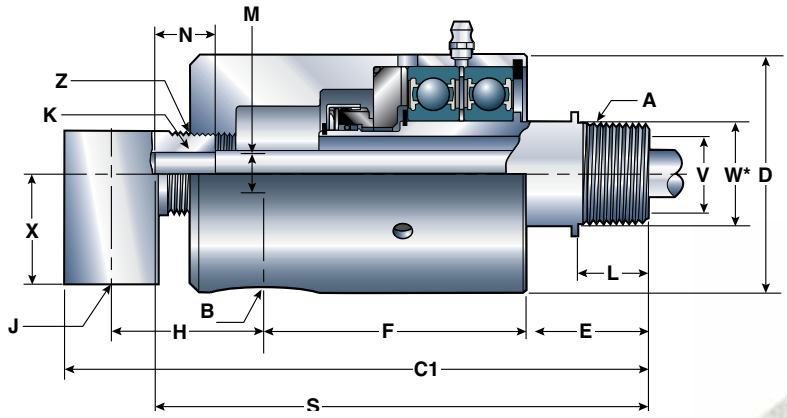

Elbows - 5000 Series Elbows for Dual Flow (Inch)

Nominal Pipe Size	Elbows for Stationary Siphon Systems				Elbows for Rotating Siphon Systems				
	Part Number	Siphon K / Pipe Thread / Tube OD	Siphon Pipe	Siphon Tube	Part Number	Siphon K	S	M	N
3/8	465409C	1/4	—	4-1/4	—	—	—	—	—
1/2	465408C	1/8 NPT	4-15/16	—	451245C	3/8	4-9/16	.370-.371	1-1/4
	465410C	3/8	—	4-15/16	—	—	—	—	—
BSP	465416C	1/8-28 BSP	125 mm	—	—	—	—	—	—
3/4	465401C	1/8 NPT	5-3/8	—	—	—	—	—	—
	465402C	1/4 NPT	5-15/32	—	—	—	—	—	—
	465403C	7/16	—	5-5/32	—	—	—	—	—
	465404C	1/2	—	5-5/32	451243C	1/2	5-5/32	.495-.496	1-1/4
BSP	465417C	1/8-28 BSP	136 mm	—	—	—	—	—	—
	465418C	1/4-19 BSP	139 mm	—	—	—	—	—	—
1	465411C	1/4 NPT	6-5/16	—	—	—	—	—	—
	465412C	3/8 NPT	6-3/16	—	451246C	5/8	6-1/8	.619-.612	1-1/4
	465413C	5/8	—	6-1/4	—	—	—	—	—
BSP	465419C	3/8-19 BSP	157 mm	—	—	—	—	—	—
1-1/4	465414C	1/2 NPT	7-13/32	—	—	—	—	—	—
	465415C	3/4	—	7-9/16	451247C	3/4	7-7/16	.743-.745	1-1/2
BSP	465420C	1/2-14 BSP	188 mm	—	—	—	—	—	—
1-1/2	465405C	1/2 NPT	8-9/32	—	—	—	—	—	—
	465406C	3/4 NPT	8-1/4	—	451244C	1	8-9/16	.998-1.000	1-3/4
	465407C	1	—	8-1/2	—	—	—	—	—
BSP	465421C	3/4-14 BSP	210 mm	—	—	—	—	—	—
2	465405C	1/2 NPT	9-11/32	—	—	—	—	—	—
	465406C	3/4 NPT	9-9/32	—	451244C	1	9-19/32	.998-1.000	1-3/4
	465407C	1	—	9-17/32	—	—	—	—	—
BSP	465421C	3/4-14 BSP	235 mm	—	—	—	—	—	—

www.duffnorton.com • Ph: (800) 477-5002 • Fax: (704) 588-1994

Performance Charts

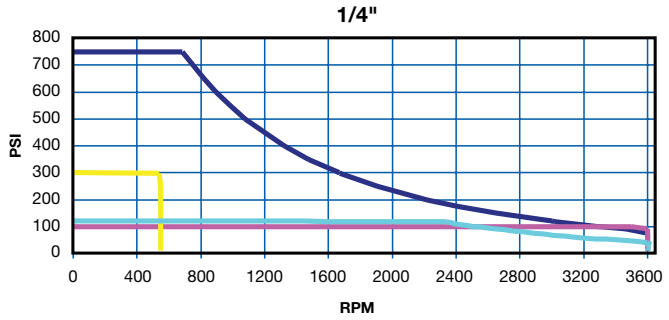

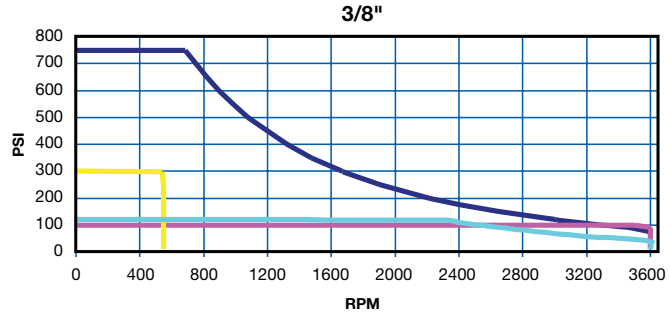

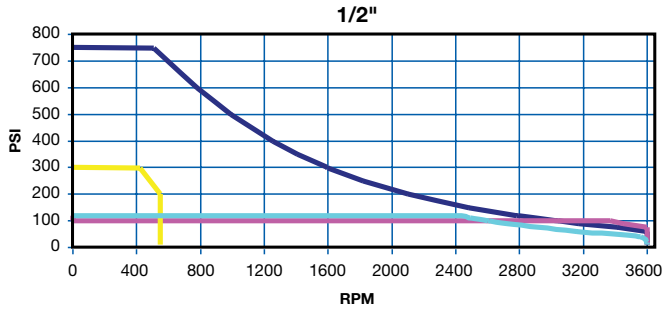

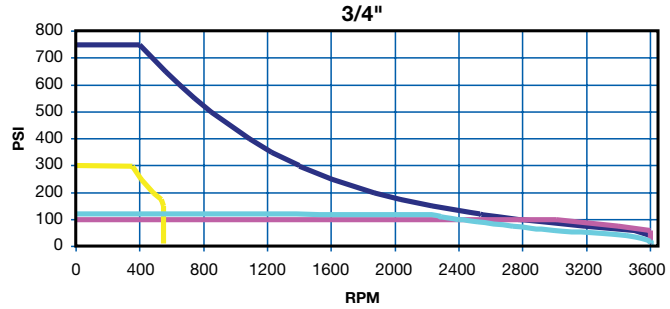

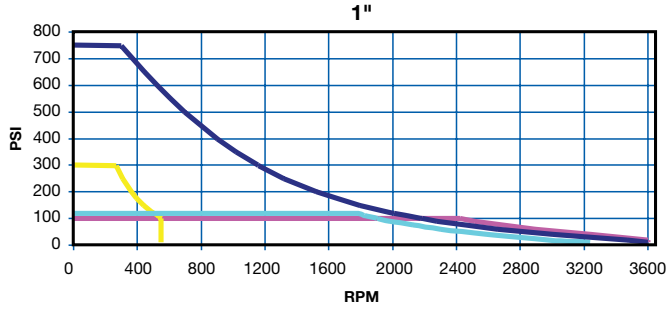

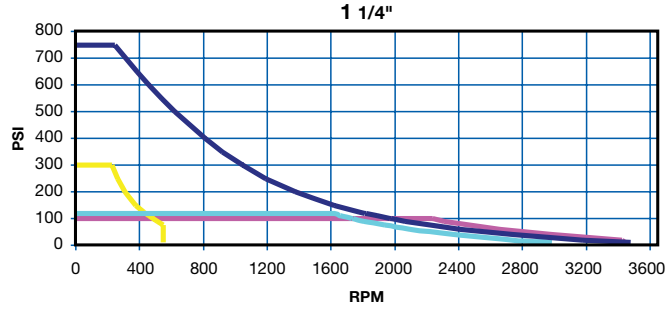

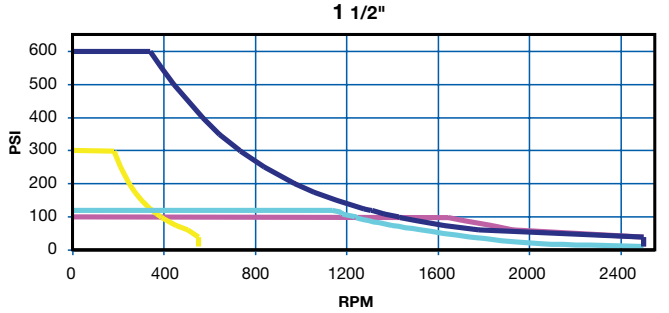

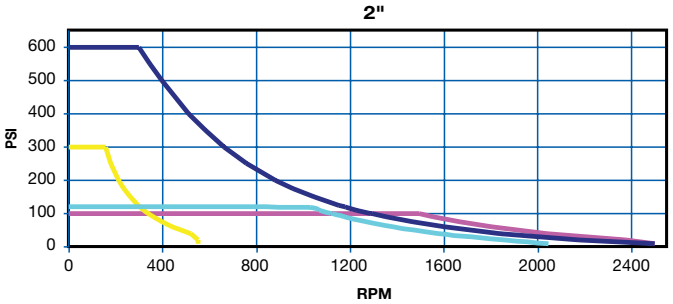

Steam Water Hot Oil Air

ROTARY UNION

9000 SERIES

GENERAL PURPOSE

MODELS ADDED

Operating Parameters

MEDIA
Steam, Hot Oil, Water
PRESSURE*
250 psi (Water), 175 psi (Steam), 100 psi (Hot Oil)
TEMPERATURE*
600° F (Hot Oil), 378° F (Steam)
SPEED*
700 RPM
THREADS
• 1/4 Inch to 3 Inch NPT • BSP Threads Available • Flanged
MATERIAL
• Cast Iron Housing with Stainless Steel or Plated Sleeve • Steel Shaft
CONFIGURATION OPTIONS
Mono Flow and Dual Flow Configurations Available

* See Performance Charts For Details

FEATURES & BENEFITS

Advanced Sealing System

- The Bellows Sealing System provides superior sealing performance throughout the wear life of the Rotary Union.

Superior Alignment

- Dual bearings available in all sizes over 1 1/4” to provide superior alignment.

Resists Debris Build-Up

- Compared to seals utilizing springs, the 9000 series bellows sealing system is more resistant to debris in contaminated media, which reduces clogging.

Easy Mounting

- The flange attaches directly to the machine journal, providing inherently concentric mounting, minimizing overhang, and partially relieving bearing load to increase service life.

Part Numbers - 9000 Series Rotary Unions • Mono Flow

Nominal Pipe Size	Shaft Thread (A)	Right Hand Thread			Left Hand Thread		
		Part Number	Description	Repair Cartridge	Part Number	Description	Repair Cartridge
1/4	1/4 NPT	730432C	R030P	441647C	730431C	L030P	441646C
	9/16-18 MT	730434C	R024P	441647C	730433C	L024P	441648C
		730436C	R024P	441651C	730435C	L024P	441650C
3/8	3/8 NPT	730444C	R100P	441659C	730443C	L100P	441658C
	5/8-18 MP	730446C	R100P	441661C	730445C	L124P	441660C
1/2	1/2 NPT	730396C	R200P	441630C	730395C	L200P	441629C
	3/4-16 MT	730402C	R224P	441634C	730401C	L224P	441633C
	7/8-14 MT	730410C	R224P	441636C	730409C	L224P	441635C
	3/4-14 MT	730639C	R224P	441632C	730638C	L224P	441631C
	7/8-16 MT	730641C	R224P	441709C	730640C	L224P	441708C
3/4	3/4 NPT	730332C	R300P	441597C	730331C	L300P	441596C
	1-14 MT	730338C	R324P	441599C	730337C	L324P	441598C
1	1 NPT	730303C	R400P	441579C	730302C	L400P	441578C
	1-1/4-12 MT	730309C	R424P	441581C	730308C	L424P	441580C
1-1/4	1-1/4 NPT	440320C	R9500P	471460C	440319C	L9500P	471459C
	1-5/8-8 MT	440326C	R9524P-3	471462C	440325C	L9524P-3	471461C
	1-5/8-12 MT	440324C	R9524P-2	471464C	440323C	L9524P-2	471463C
1-1/2	1-1/2 NPT	440144C	R9600P	471364C	440143C	L9600P	471363C
	2-8 MT	440148C	R9624P-3	471368C	440147C	L9624P-3	471367C
	2-12 MT	440152C	R9624P-2	471374C	440151C	L96240P-2	471373C
2	2 NPT	440465C	R97004P	471554C	440464C	L9700P	471553C
2-1/2	2-1/2 NPT	440535C	R9800P	471556C	440534C	L9800P	471555C
3	3 NPT	440493C	R9900P	471558C	440492C	L9900P	471557C
	3-1/2-8 MT	440499C	R9924P-3	471644C	440498C	L9924P-3	471643C

Part Numbers - 9000 Series Rotary Unions • Dual Flow

Nominal Pipe Size	Shaft Thread (A)	Right Hand Thread			Left Hand Thread		
		Part Number	Description	Repair Cartridge	Part Number	Description	Repair Cartridge
1/2	1/2 NPT	730398C	R200S	441630C	730397C	L200S	441629C
	3/4-16 MT	730404C	R224S	441634C	730403C	L224S	441633C
	7/8-14 MT	730412C	R224S	441636C	730411C	L224S	441635C
3/4	3/4 NPT	730334C	R300S	441597C	730333C	L300S	441596C
	1-14 MT	730340C	R324S	441599C	730339C	L324S	441598C
1	1 NPT	730305C	R400S	441579C	730304C	L400S	441578C
	1-1/4-12 MT	730311C	R424S	441581C	730310C	L424S	441580C
1-1/4	1-1/4 NPT	440322C	R9500S	471460C	440321C	L9500S	471459C
	1-5/8-8 MT	440330C	R9524S-3	471462C	440329C	L9524S-3	471461C
	1-5/8-12 MT	440328C	R9524S-2	471464C	440327C	L9524S-2	471463C
1-1/2	1-1/2 NPT	440146C	R9600S	471364C	440145C	L9600S	471363C
	2-8 MT	440150C	R9624S-3	471368C	440149C	L9624S-3	471367C
	2-12 MT	440154C	R9624S-2	471374C	440153C	L96240S-2	471373C
2	2 NPT	440467C	R9700S	471554C	440466C	L9700S	471553C
2-1/2	2-1/2 NPT	440575C	R9800S	471556C	440574C	L9800S	471555C
3	3 NPT	440495C	R9900S	471558C	440494C	L9900S	471557C

Part Numbers - 9000 Series Rotary Unions • Dual Flow Rotating Siphon

Nominal Pipe Size	Shaft Thread (A)	Right Hand Thread			Left Hand Thread		
		Part Number	Description	Repair Cartridge	Part Number	Description	Repair Cartridge
1/2	1/2 NPT	730400C	R225-4	441630C	730399C	L225-4	441629C
	3/4-14	730406C	XR225-4	441632C	730405C	XL225-4	441631C
	3/4-16	730408C	XR225-4	441634C	730407C	XL225-4	441633C
	7/8-14	730414C	XR225-4	441636C	730413C	XL225-4	441635C
	7/8-16	730644C	XR225-4	441709C	730643C	XL225-4	441708C
3/4	3/4-14	730336C	R325-2	441597C	730335C	L325-2	441596C
	1-14	730342C	XR325-2	441599C	730341C	XL325-2	441598C
1	1 NPT	730307C	R425-10	441579C	730306C	L425-10	441578C
	1-1/2-12	730315C	XR425-10	441583C	730314C	XL425-10	441582C
	1-1/4-12	730313C	XR425-10	441581C	730312C	XL425-10	441580C
1-1/4	1-1/4 NPT	440334C	R9525-20	471460C	440333C	L9525-20	471459C
	1-5/8-12 MT	440336C	XR9525-20	471464C	440335C	XL9525-20	471463C
1-1/2	1-1/2 NPT	440251C	R9625-30	471364C	440250C	L9625-30	471363C
	2-12 MT	440438C	XR9625-30	471374C	440437C	XL9625-30	471373C
	2-8 MT	440449C	XR9625-30	471368C	440448C	XL9625-30	471367C
2	2 NPT	440475C	R9725-30	471554C	440474C	L9725-30	471553C
2-1/2	2-1/2 NPT	440585C	R9825-40	471556C	440584C	L9825-40	471555C
3	3 NPT	440587C	R9925-50	471558C	440586C	L9925-50	471557C

ROTARY UNION
9000 SERIES
GENERAL PURPOSE

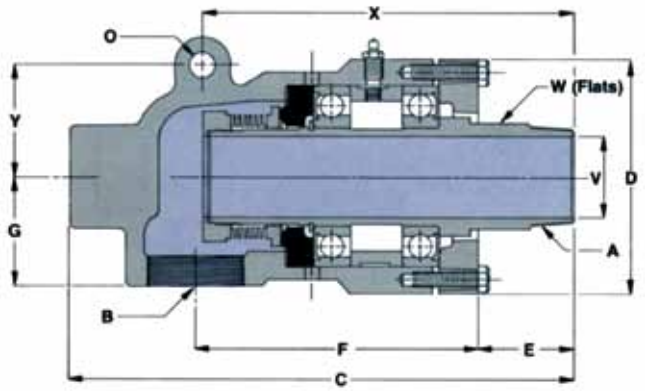

Dimensions - 9000 Series Rotary Unions • Mono Flow (Inch)

Nominal Pipe Size	Thread (A)	Inlet B (NPT)	C	D	E	F	G	V	W	O	Y	X
1/4	1/4 NPT	1/4	4-3/8	1-3/4	1-1/8	2-9/16	1-1/16	1/4	5/8	—	—	—
	9/16-18 MT											
	5/8-18 MT											
3/8	3/8 NPT	3/8	4-3/8	1-3/4	1-1/8	2-9/16	1-1/16	3/8	11/16	—	—	—
	5/8-18 MT											
1/2	1/2 NPT	1/2	5	2-3/8	1-1/2	2-3/4	1-1/4	1/2	15/16	—	—	—
	3/4-16 MT											
	7/8-14 MT											
	3/4-14 MT											
	7/8-16 MT											
3/4	3/4 NPT	3/4	5-1/2	2-1/2	1-5/8	3	1-7/16	3/4	1-3/4	—	—	—
	1-14 MT											
1	1 NPT	1	6-1/8	3	1-3/4	3-3/8	1-3/4	1	1-11/32	—	—	—
	1-1/4-12 MT											
1-1/4	1-1/4 NPT	1-1/4	9-1/16	3-3/4	2-1/16	4-13/16	2-3/16	1-1/4	1-11/16	5/8	2	6-7/8
	1-5/8-8 MT		8-15/16		1-15/16							6-3/4
	1-5/8-12 MT											
1-1/2	1-1/2 NPT	1-1/2	9-11/16	4/18	2-3/16	5-1/4	2-3/16	1-1/2	1-15/16	5/8	2-1/4	7-3/4
	2-8 MT		10-1/4		2-3/4							7-15/16
	2-12 MT											
2	2 NPT	2	11-3/4	5-7/8	2-7/16	6-7/8	2-5/8	2	2-9/16	5/8	2-3/4	8-9/16
2-1/2	2-1/2 NPT	2-1/2	13-7/8	6-1/2	3-1/2	7-3/16	3-3/8	2-1/2	3	—	—	—
3	3 NPT	3	15-3/8	7-1/8	3-1/2	8-5/16	3-7/8	3	3-5/8	—	—	—
	3-1/2-8 MT		15-3/4		3-7/8					—	—	—

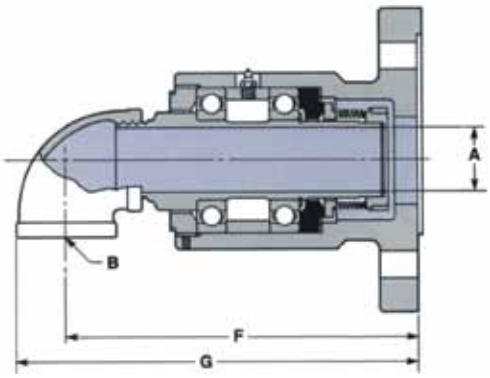

Models Added

Dimensions - Mono Flow (Inch) • Flanged

Nominal Pipe Size	Shaft ID (A)	Part Number	Description	Repair Cartridge
1-1/4	1-1/4	Consult Factory	570P-1-U	Consult Factory
1-1/2	1-1/2		670P-1-U	
2	2		770P-1-U	
2-1/2	2-3/8		870P-1-U	
3	2-7/8		970P-1-U	
4	4		1070-P-U	
5	5		1170-P-U	

Dimensions - Mono Flow (Inch) • Flanged

Nominal Pipe Size	Inlet (B)	F	G
1-1/4	1-1/4 NPT	8-7/16	9-1/2
1-1/2	1-1/2 NPT	8-13/16	10-1/8
2	2 NPT	10-5/8	12-1/16
2-1/2	2-1/2 NPT	12	13-13/16
3	3 NPT	14-1/16	16-1/4
4	4 Flange	438 mm	Consult Factory
5	5 Flange	545 mm	

www.duffnorton.com • Ph: (800) 477-5002 • Fax: (704) 588-1994

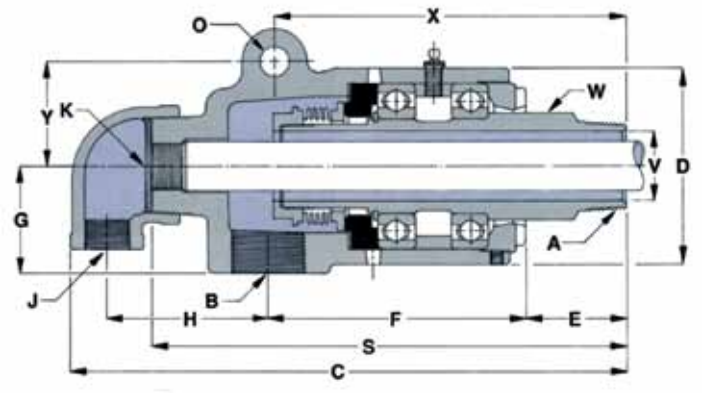

Dimensions - 9000 Series Rotary Unions • Dual Flow • Stationary Siphon Pipe (Inch)

Nominal Pipe Size	Shaft Thread (A)	Intlet (B)	Outlet (J)	Siphon K (NPSM)	C	D	E	F	G	H	S	V	W	O	Y	X
1/2	1/2 NPT 3/4-16 MT 7/8-14 MT	1/2	1/2	1/8	7-1/4	2-3/8	1-1/2	2-3/4	1-1/4	2-1/8	6	1/2	15/16	—	—	—
3/4	3/4 NPT 1-14 MT	3/4	1/2	1/4	7-3/4	2-1/2	1-5/8	3	1-7/16	2-3/8	6-3/8	3/4	1-1/8	—	—	—
1	1 NPT	1	1/2	3/8	8-1/2	3	1-3/4	3-3/8	1-3/4	2-5/8	7-1/8	1	1-3/8	—	—	—
1-1/4	1-1/4 NPT 1-5/8-8 MT 1-5/8-12 MT	1-1/4	1/2	1/2	10-5/8 10-7/8	3-3/4	2-1/8 2	4-13/16	2	—	8-7/8 8-3/4	1-1/4	1-11/16	5/8	2	6-3/4
1-1/2	1-1/2 NPT 2-8 MT 2-12 MT	1-1/2	3/4	3/4	11-3/8 11-15/16	4-1/8	2-3/16 2-3/4	5-1/4	2-3/16	—	9-9/16 10-1/8	1-1/2	1-15/16	5/8	2-1/4	7-3/8 7-15/16
2	2 NPT	2	1	3/4	13/7/8	5-7/8	2-7/16	6-1/2	2-5/8	—	11-1/2	2	2-9/16	5/8	2-3/4	8-9/16
2-1/2	2-1/2 NPT	2	1	1	16-7/8	6-1/2	3-1/2	7-1/4	3-3/8	—	14	2-1/2	3	—	—	—
3	3 NPT	2-1/2	1-1/4	1-1/4	18-3/4	7-1/8	3-1/2	8-5/16	3-7/8	—	15-5/8	3	3-5/8	—	—	—

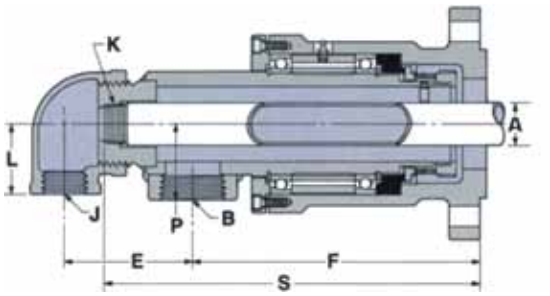

Dimensions - Dual Flow • Flanged • Stationary Siphon Pipe (Inch)

Nominal Pipe Size	Shaft ID (A)	Part Number	Description	Repair Cartridge
1-1/4	1-1/4	Consult Factory	570S-1-U	Consult Factory
1-1/2	1-1/2		670S-1-U	
2	2		770S-1-U	
2-1/2	2-3/8		870S-1-U	
3	2-7/8		970S-1-U	
4	4		1070-S-U	
5	5		1170-S-U	

Models Added

Dimensions - Dual Flow • Flanged • Stationary Siphon Pipe (Inch)

Nominal Pipe Size	Inlet B (NPT)	Outlet J (NPT)	Siphon Tap K (NPSM)	E	F	S	L	P
1-1/4	1	1/2	1/2	2-3/4	7-1/16	8-7/8	1-5/8	1-5/8
1-1/2	1-1/4	3/4	3/4	3-3/8	7-11/16	9-15/16	1-13/16	1-13/16
2	1-1/2	1	3/4	3-13/16	9-1/16	11-1/2	2-1/16	2-1/16
2-1/2	2	1-1/4	1	4-3/4	10-5/16	13-9/16	2-5/8	2-5/8
3	2-1/2	1-1/4	1-1/4	5-1/4	11-7/8	15-1/2	2-7/8	3-1/16
4	Consult Factory			—	—	—	—	—
5				—	—	—	—	—

ROTARY UNION
9000 SERIES
GENERAL PURPOSE

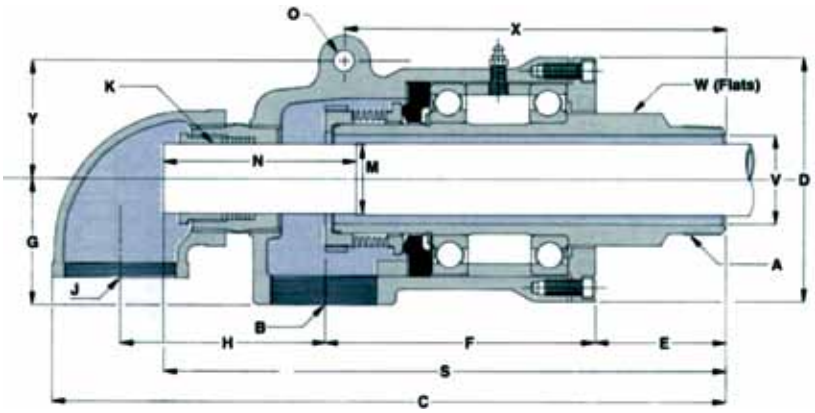

Dimensions - 9000 Series Rotary Unions • Dual Flow Rotating Siphon (Inch)

Nominal Pipe Size	Shaft Thread (A)	Inlet (B)	Outlet (J)	Siphon (K)	C	D	E	F	G	H	M	N	O	S	V	W	X	Y
1/2	1/2 NPT 3/4-14 MT 3/4-16 MT 7/8-14 MT 7/8-16 MT	1/2	1/2	1/4 Tube	7-1/4	2-3/8	1-1/2	2-3/4	1-1/4	2-1/8	0.249 to 0.252	1-5/8	—	6-1/4	1/2	15/16	—	—
3/4	3/4 NPT 1-14 MT	3/4	1/2	1/4 Pipe	7-3/4	2-1/2	1-5/8	3	1-7/16	2-3/4	0.522 to 0.528	1-3/4	—	6-13/16	3/4	1-1/8	—	—
1	1 NPT 1-1/4-12 MT	1	1/2	3/8 Pipe	8-1/2	3	1-3/4	3-3/8	1-3/4	2-5/8	0.657 to 0.663	2	—	7-11/16	1	1-3/8	—	—
1-1/4	1-1/4 NPT 1-5/8-12 MT	1-1/4	1/2	1/2 Pipe	10-5/8 10-1/2	3-3/4	2-1/8 2	4-13/16	2	3	0.803 to 0.808	3	5/8	9-7/16 9-5/16	1-1/4	1-11/16	6-7/8 6-3/4	2
1-1/2	1-1/2 NPT 2-12 MT 2-8 MT	1-1/2	3/4	3/4 Pipe	11-3/8 11-15/16	4-1/8	2-3/16 2-3/4	5-1/4	2-3/16	3-1/4	0.991 to 0.997	3-1/4	5/8	10-1/8 10-3/4	1-1/2	1-15/16	7-3/8 7-15/16	2-1/4
2	2 NPT	2	1	3/4 Pipe	13-7/8	5-7/8	2-7/16	6-1/2	2-5/8	4-1/16	0.991 to 0.997	3-1/4	5/8	12-1/8	2	2-9/16	8-9/16	2-3/4
2-1/2	2-1/2 NPT	2	1-1/4	1 Pipe	16-7/8	6-1/2	3-1/2	7-1/4	3-3/8	5	1.241 to 1.247	3-3/4	—	14-11/16	2-1/2	3	—	—
3	3 NPT	2-1/2	1-1/4	1-1/4 Pipe	18-3/4	7-1/8	3-1/2	8-5/16	3-7/8	5-1/2	1.615 to 1.621	4-1/4	—	16-3/8	3	3-5/8	—	—

Dimensions - Dual Flow • Flanged (Inch)

Nominal Pipe Size	Shaft ID (A)	Part Number	Description	Repair Cartridge
1-1/4	1-1/4	Consult Factory	587-20-U	Consult Factory
1-1/2	1-1/2		687-30-U	
2	2		787-30-U	
2-1/2	2-3/8		887-40-U	
3	2-7/8		987-50-U	
4	4		—	
5	5		—	

Models Added

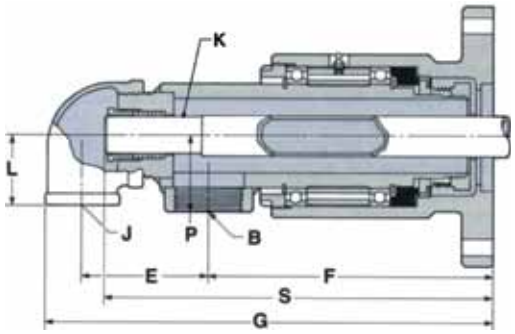

Dimensions - Dual Flow • Flanged • Rotating Siphon Pipe (Inch)

Nominal Pipe Size	Inlet B (NPT)	Outlet J (NPT)	Siphon Diameter	E	F	G	L	P	S
1-1/4	1	1/2	Siphon not provided. Contact factory for information	2-3/4	7-1/16	10-5/16	1-5/8	1-5/8	9-1/2
1-1/2	1-1/4	3/4		3-3/8	7-11/16	11-13/16	1-13/16	1-7/8	10-3/4
2	1-1/2	1		3-13/16	9-1/16	14	2-1/16	2-5/16	12-1/4
2-1/2	2	1-1/4		4-3/4	10-5/16	16-5/16	2-5/8	2-5/8	14-1/4
3	2-1/2	1-1/4		5-1/4	11-7/8	18-3/4	2-7/8	3-1/16	16-1/4
4	Consult Factory			—	—	—	—	—	—
5				—	—	—	—	—	—

www.duffnorton.com • Ph: (800) 477-5002 • Fax: (704) 588-1994

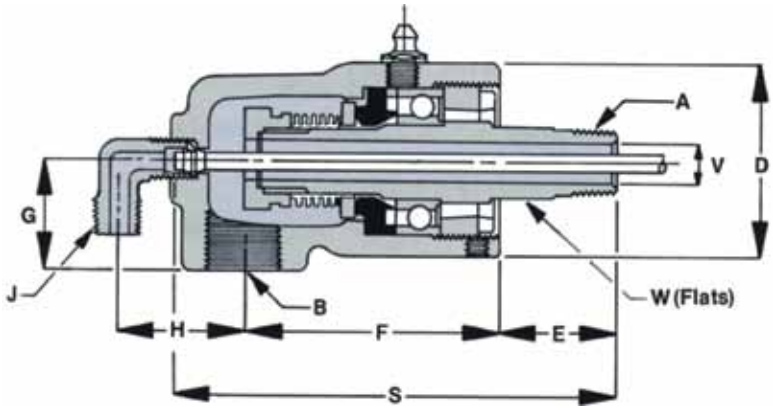

Part Numbers - Dual Flow • Compression Fitting Siphon

Nominal Pipe Size	Shaft Thread (A)	Thread Rotation	Right Hand			Left Hand		
			Part Number	Description	Repair Cartridge	Part Number	Description	Repair Cartridge
1/4	1/4 NPT	RH	730779C	R019-2	441647	730778	L019-2	441646
			730781C	R019-3	441647	730780	L019-3	441646
3/8	3/8 NPT		730787C	R119-2	441659	730786	L119-2	441658
			730783C	R119-3	441659	730782	L119-3	441658
1/2	1/2 NPT		730800C	R219-6	441630	730799	L219-6	441629
3/4	3/4 NPT		730804C	R319-8	441597	730803	L319-8	441596
1	1 NPT		730429C	R419-10	441579	730428	L419-10	441578

Models Added

Dimensions - Dual Flow • Compression Fitting Siphon (Inch)

Nominal Pipe Size	Thread A (NPT)	Inlet B (NPT)	Outlet J	Siphon Tube Size	D	E	F	G	V	W	S	H
1/4	1/4	1/4	1/8 Male	1/8	1-3/4	1-1/8	2-9/16	1-1/16	1/4	5/8	4-7/16	1-1/4
				3/16								
3/8	3/8	3/8	1/8 Male	1/8	1-3/4	1-1/8	2-9/16	1-1/16	3/8	11/16	4-7/16	1-1/4
				3/16								
1/2	1/2	1/2	1/2 NPT	3/8	2-3/8	1-1/2	2-3/4	1-1/4	1/2	15/16	6-3/8	2-1/8
3/4	3/4	1/2	1/2 NPT	1/2	2-1/2	1-5/8	3	1-7/16	3/4	1-1/8	6-7/8	5-5/16
1	1	1	3/4 NPT	5/8	3	1-3/4	3-3/8	1-3/4	1	1-3/8	7-3/4	2-9/16

ROTARY UNION
9000 SERIES
REPAIR PARTS

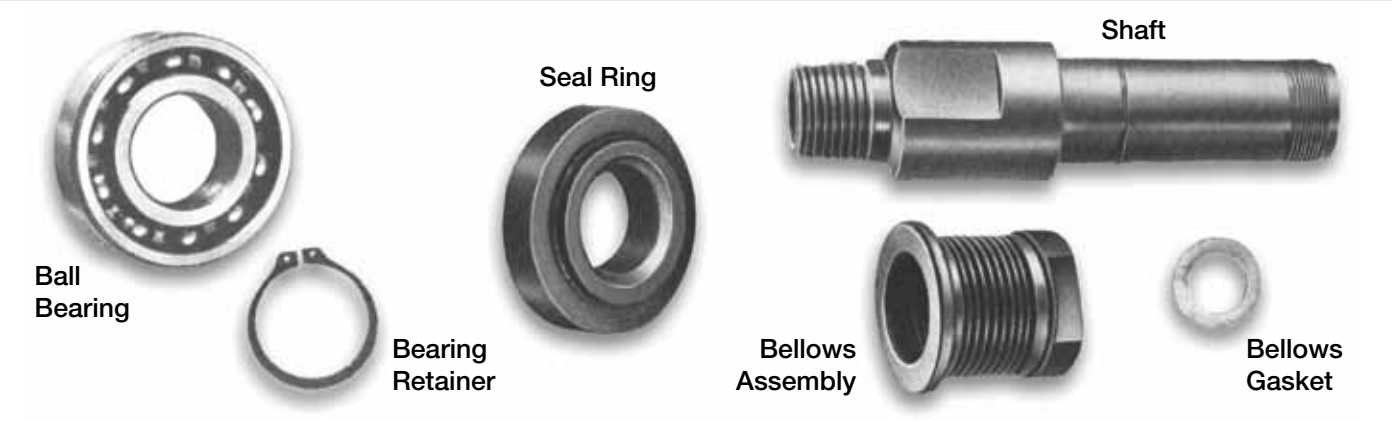

Repair Parts - 9000 Series Rotary Union

Nominal Pipe Size	Thread Rotation	Shaft		Ball Bearing	Bearing Retainer	Seal Ring	Bellows Gasket	Bellows Assembly	Housing Gasket
		Shaft Thread (A)	Part Number						
1/4	LH	1/4 NPT	463474C	482020C	847022C	463472C	482033C	481010C	482026C
	RH		463475C						
	LH	9/16-18 MT	463476C						
	RH		463477C						
	LH	5/8-18 MT	463478C						
	RH		463479C						
3/8	LH	3/8 NPT	463484C	482020C	847022C	436472C	482033C	481010C	482026C
	RH		463485C						
	LH	5/8-18 MT	463486C						
	RH		463487C						
1/2	LH	1/2 NPT	463428C	482076C	854744C	463426C	482090C	481018C	482083C
	RH		463429C						
	LH	3/4-16 MT	463436C						
	RH		463437C						
	LH	7/8-14 MT	463430C						
	RH		463431C						
	LH	3/4-14 MT	463434C						
	RH		463435C						
	LH	7/8-16 MT	463432C						
	RH		463433C						
3/4	LH	3/4 NPT	463291C	482134C	844654C	463287C	482148C	481035C	482141C
	RH		463292C						
	LH	1-14 MT	463293C						
	RH		463294C						
1	LH	1 NPT	463265C	482188C	844341C	463264C	482201C	481048C	482195C
	RH		463266C						
	LH	1-1/4-12 MT	463277C						
	RH		463278C						
1-1/4	LH	1-1/4 NPT	485070C	482241C	854753C	482246C	482255C	481062C	482248C
	RH		485071C						
	LH	1-5/8-8 MT	485086C						
	RH		485087C						
	LH	1-5/8-12 MT	485084C						
	RH		485085C						
1-1/2	LH	1-1/2 NPT	483951C	482303C	863095C	482308C	482316C	481073C	482310C
	RH		483952C						
	LH	2-8 MT	483953C						
	RH		483954C						
	LH	2-12 MT	483955C						
	RH		483956C						
2	LH	2 NPT	485181C	482362C	854757C	482786C	482788C	481247C	482787C
	RH		485182C						
2-1/2	LH	2-1/2 NPT	485256C	482809C	854762C	482811C	482813C	481268C	482812C
	RH		485257C						
3	LH	3 NPT	485155C	482839C	854766C	482841C	482843C	481289C	482842C
	RH		485156C						
	LH	3-1/2-8 MT	485199C						
	RH		485200C						
	LH	3-1/2-12 MT	485189C						
	RH		485198C						

www.duffnorton.com • Ph: (800) 477-5002 • Fax: (704) 588-1994

Performance Charts

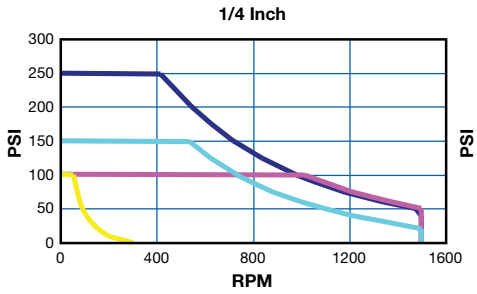

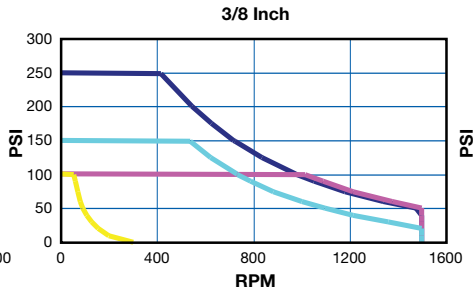

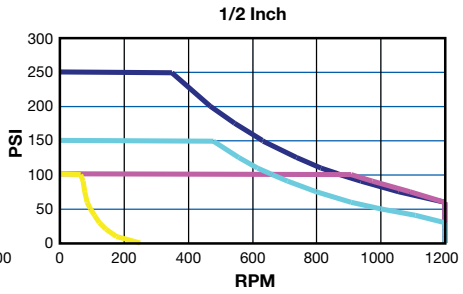

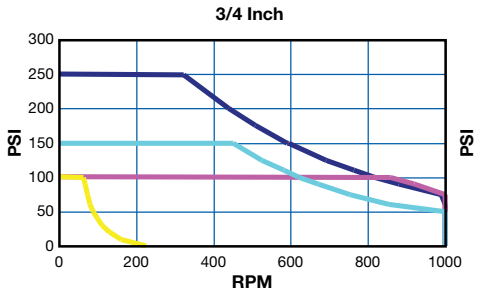

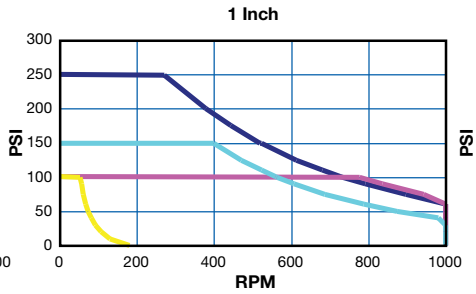

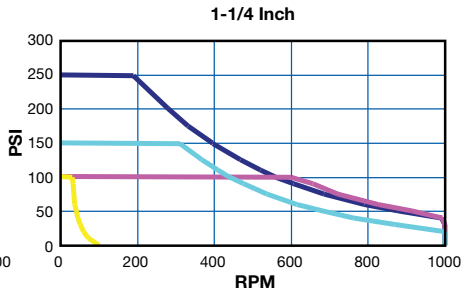

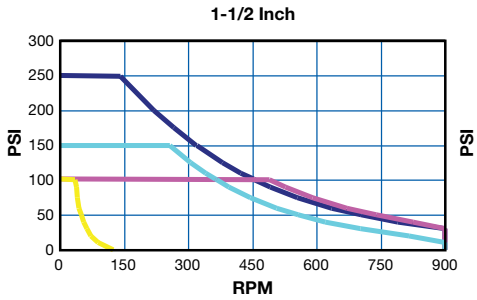

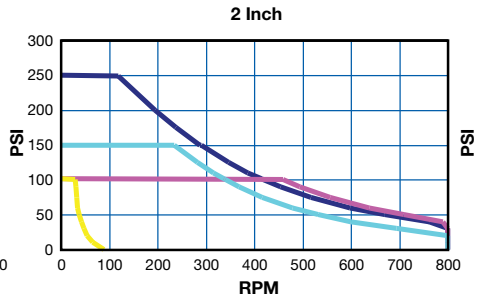

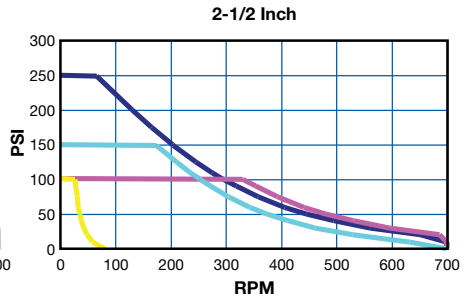

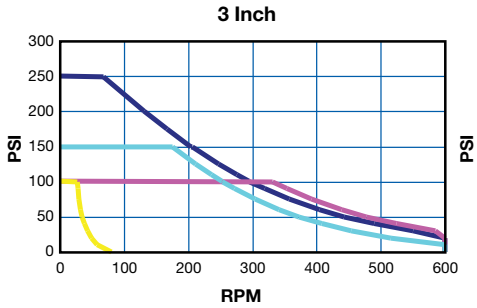

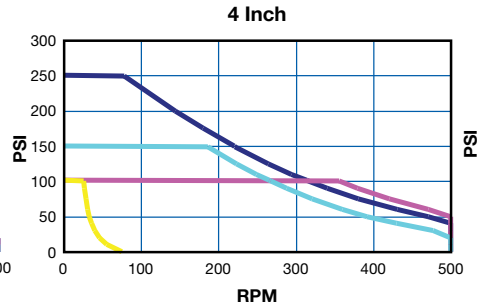

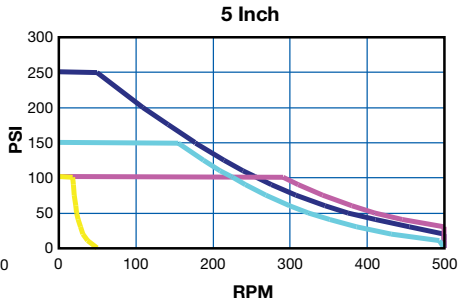

Steam Water Hot Oil Air

ROTARY UNION

2000 SERIES

SHOCK & VIBRATION RESISTANT

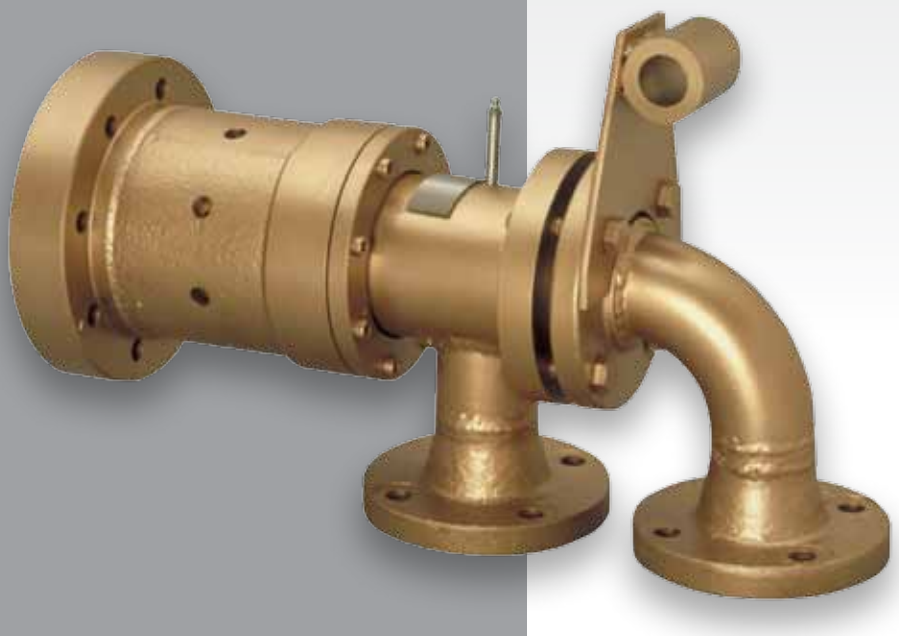

Operating Parameters
MEDIA
Water, Hot Oil, Air
PRESSURE*
150 psi (Water), 100 psi (Air & Hot Oil)
TEMPERATURE*
375° F (Water), 550° F (Hot Oil)**
SPEED*
500 RPM
CONNECTIONS
2 Inch to 4 Inch ASA Flange
MATERIAL
Cast Iron Housing, Steel Shaft
CONFIGURATION OPTIONS
Mono Flow and Dual Flow Configurations Available

* See Performance Charts For Details

**Consult factory for applications exceeding 375° F

FEATURES & BENEFITS

Heavy Duty Design

- Designed with two ball bearings spaced to withstand radial and thrust loads.

No Leakage In Tough Applications

- Compression springs in the 2000 Series provide even loading across the seal surfaces to maintain zero leakage even in low pressure applications.

Easy Maintenance

- Designed with an integral flange that allows repairs without removing the housing from the machine.

Easy Mounting

- The flange attaches directly to the machine journal, providing inherently concentric mounting, minimizing overhang, and partially relieving bearing load to increase service life.

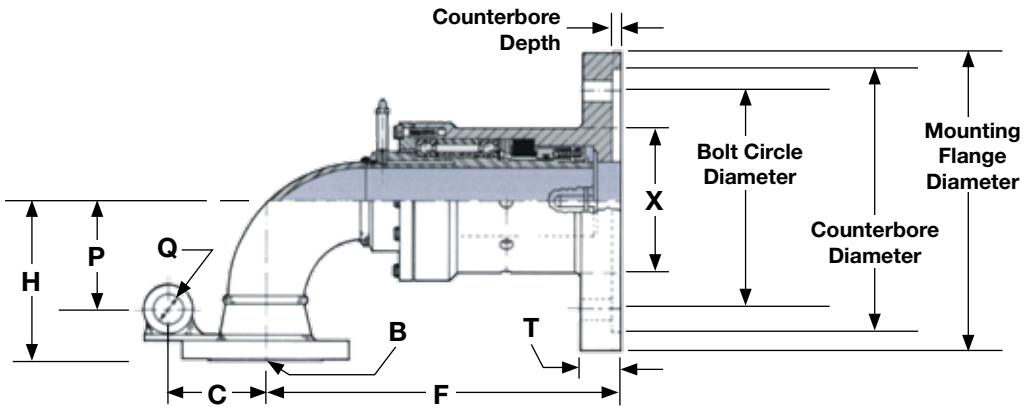

2000 Series Rotary Unions • Mono Flow (Inch)

Nominal Pipe Size	Part Number	Repair Cartridge	B (3)	F	T	Mounting Flange Diameter	Bolt Circle Diameter	Flange Type	Counterbore		Bolt Hole Size	Number of Bolt Holes (4)	H	P	Diameter (X)	Diameter (Q)	C
									Diameter	Depth							
2	730747C	441781C	2	12-3/4	1-7/16	10	7-1/8	2	9.002 to 9.004	3/16	11/16	4	5-1/2	N/A	5-1/4	—	—
3	730841C	441845C	3	16-1/8	1-3/4	9-1/2	7-9/16	2				8	7-1/4	N/A	6-5/16	—	—
4	730842C	441846C	4	20-1/4	1-3/4	11-1/2	8-15/16	2	10.824 to 10.820		13/16	6	9-1/8	6-3/4	7-3/4	1/8	5-3/4

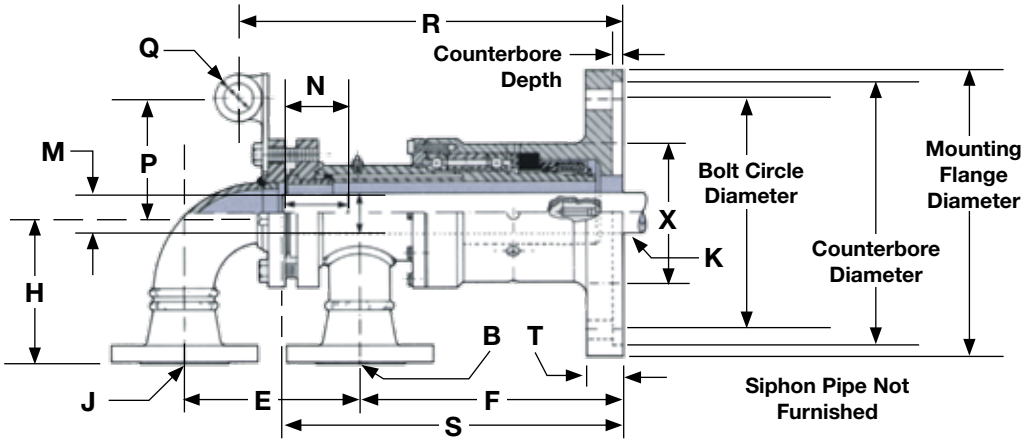

2000 Series Rotary Unions • Dual Flow • With Revolving Siphon (Inch)

Nominal Pipe Size	Part Number	Repair Cartridge	B (3)*	F	T	Mounting Flange Diameter	Bolt Circle Diameter	Flange Type	Counterbore		Bolt Hole Size	Number of Bolt Holes (4)*	H	P	Diameter (X)	Diameter (Q)	K (1)*
									Diameter	Depth							
2	730843C	441781C	1-1/2	10	1-7/16	10	7-1/8	2	9.002 to 9.004	3/16	11/16	4	4-5/8	—	—	—	3/4
3	730737C	441845C	2-1/2	12-1/2	1-3/4	9-1/2	7-9/16		9.002 to 9.004		11/16	8	7-1/8	5-1/2	6-5/16	—	—
4	730852C	441846C	2-1/2	15-3/8	1-3/4	11-1/2	8-15/16		10.820 to 10.824		13/16	6	7-1/8	6-1/8	7-3/4	1/8	5-3/4

(1)* Standard siphon pipe diameter.
(2)* Machined dimension to allow revolving siphon pipe to run concentrically with journal diameter to within 0.005" T.I.R.
(3)* 150 lb. ASA Flange.
(4)* Equally spaced.

NOTES:

- For heat transfer oil applications, consult factory
- Other flange dimensions available. See previous page.
- For dimensions on 5"- 6", consult factory

2000 Series Rotary Unions • Dual Flow • Revolving Siphon (Inch) - Continued

M (2)*	N	J (3)*	S	E	R
0.991 to 0.997	4-1/4	1-1/2	13-3/8	6-5/8	N/A
1.865 to 1.871		2-1/2	16-1/4	8-3/8	18-1/4
2.801 to 2.807		2-1/2	19-3/8	8-7/8	21

ROTARY UNION
2000 SERIES
SHOCK & VIBRATION RESISTANT

The unique design of this 2000 series flanged type joint permits them to be used to introduce heating and cooling agents into rolls or cylinders in various types of machinery. Models are available to handle water, oil and other fluids in applications requiring sealing pressure to 150 psi, speeds to 500 rpm, and temperature to 550ºF when specified.

1 Flexible Hose

Eliminates complex piping, allows adjustment of rolls without repiping. Allows rotary joint to "float" so as to avoid unnecessary strain on sealing surfaces. A flexible hose either rubber or metal - must always be used with rotary joints.

2 Flanged Inlet

Elbow of steel is a 150 lb. ASA flange type.

3 Flanged Rotating Housing

Prevents leakage under pressure and protects the internal parts for a long service life. The flanged housing attaches directly to the machine journal, providing inherently concentric mounting, minimizes overhang. The housing may rotate in either direction without causing back out problems.

4 Stationary shaft

Is constructed of steel. It serves as a conduit for the fluid transfer from the flanged inlet into the revolving flanged housing.

5 Lubrication Fitting

Located on the stationary shaft allows lubrication of the ball bearings while the rotary joint is in operation.

6 Two Single Row, Widely Spaced Ball Bearings

For radial and thrust loads.

7 Grease Ring Assembly

Made of steel, ground and spaced for ball bearing load sharing for increased life.

8 Drain Ring

Made of steel. It allows minute start-up leakage from entering the ball bearings.

9 Seal Ring

Forms the primary rotating seal with the face ring.

Order Checklist

Supply the following information when ordering

- ☐ **1.** Desired bolt circle
- ☐ **2.** Bolt hole size
- ☐ **3.** Number of bolt holes and spacing
- ☐ **4.** Desired flange thickness
- ☐ **5.** Flange O.D.
- ☐ **6.** Pilot diameter and type
- ☐ **7.** Pilot (length or depth)

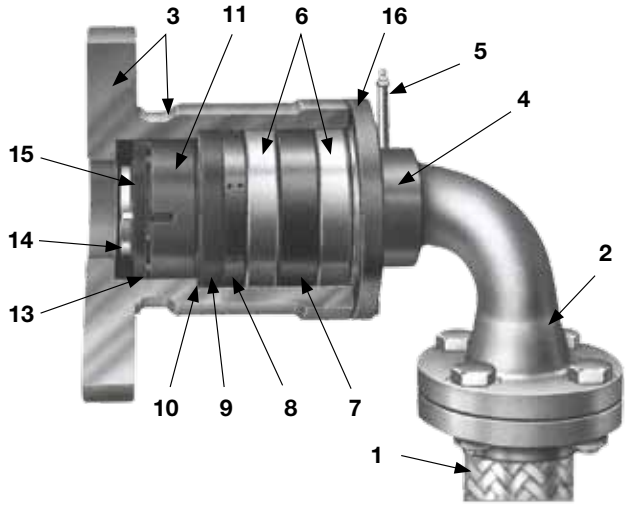

The seal ring is constructed of carbon graphite to provide a low friction, wear resistant surface.

10 Gasket

Provides an effective seal between the housing and the fluid chamber.

11 The Face Ring

Constructed of hardened and tempered stainless steel mates with the seal ring to form the primary seal.

12 O-Ring Elastomer (not shown)

Made of ethylene propylene for hot water applications. For higher temperature applications, a perfluoroelastomer is used.

13 Compression Springs

Apply an initial pressure between the face ring and seal ring to provide sealing for low pressure applications.

14 Drive Collar

Keys the face ring and the shaft together to prevent rotation.

15 Retainer Rings

Secure the internal components to the shaft.

16 Flange Secures

Secures the internal components within the flanged housing. This allows quick rotary joint repair and less machine downtime.

Dimensions - 2000 & 9000 • Bolt & Flange

Shaft I.D.	Minimum Bolt Circle		Max. Flange Diameter (A)	Max. Flange Thickness
	Bolt Circle (B)	Cap Screw Diameter		
2	7-1/8	5/8	10-7/8	1-7/16
3	7-9/16	5/8	13-1/2	1-3/4
4	8-15/16	3/4	14-7/8	2-1/16
5	11-9/16	1	16-1/4	2-3/4

*All dimensions in inches. See page 35 for diagram.

www.duffnorton.com • Ph: (800) 477-5002 • Fax: (704) 588-1994

2000 & 9000 Series Flange Mountings

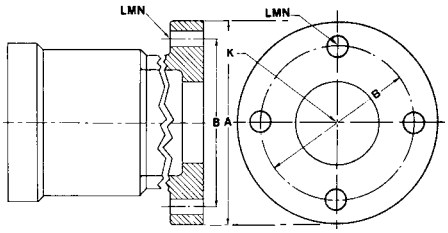

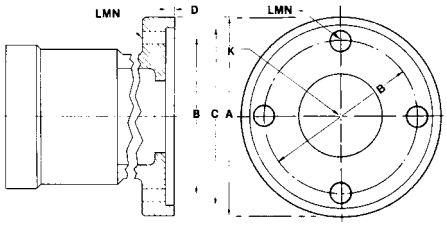

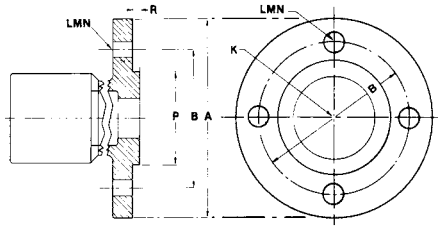

Flange Housing Type 1

A. Overall diameter
B. Bolt circle diameter
K. Rotary Union joint shaft thread size and direction
L. Size of bolt holes
M. Type and size of bolts
N. Number of bolt holes required

Flange Housing with Counterbore - Type 2

A. Overall diameter
B. Bolt circle diameter
C. O.D. of journal for sizing counterbore diameter
D. Counterbore depth
K. Rotary Union joint shaft thread size and direction
L. Size of bolt holes
M. Type and size of bolts
N. Number of bolt holes required

Flange Housing with Pilot Type 3

A. Overall diameter
B. Bolt circle diameter
K. Rotary Union joint shaft thread size and direction
L. Size of bolt holes
M. Type and size of bolts
N. Number of bolt holes required
P. I.D. of jounal for sizing pilot diameter
R. Pilot length

Performance Charts

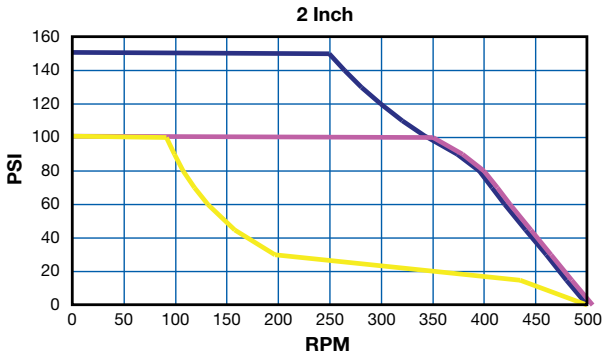

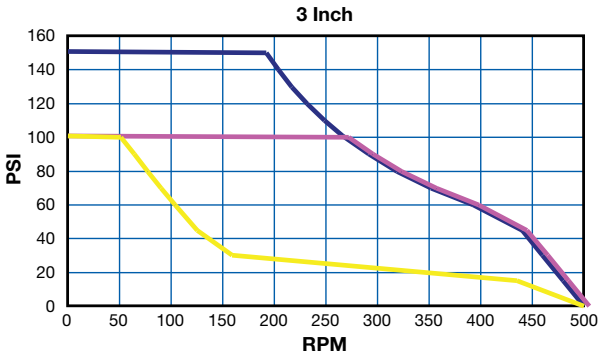

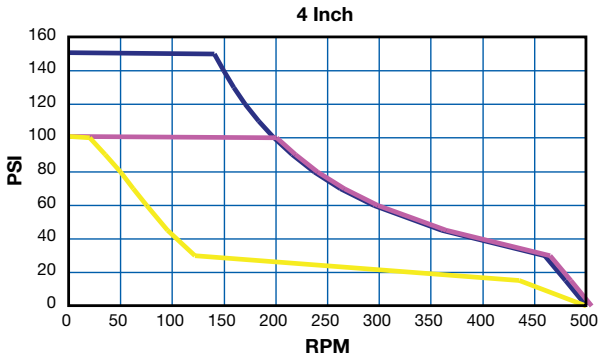

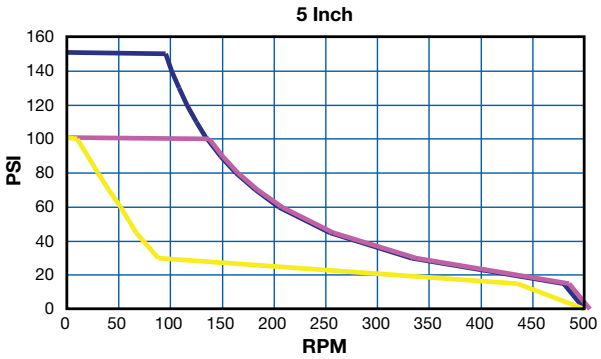

Water Hot Oil Air

ROTARY UNION

8000 SERIES

STEAM & HOT OIL

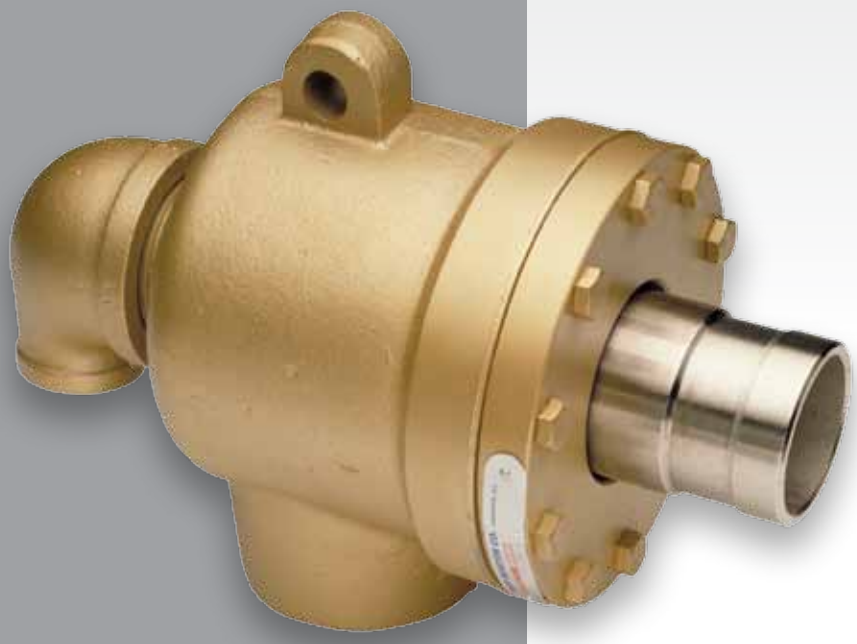

Operating Parameters
MEDIA
Steam, Hot Oil
PRESSURE*
175 psi (Steam), 100 psi (Hot Oil)
TEMPERATURE*
450° F (Steam), 600° F (Hot Oil)
SPEED*
600 RPM
THREADS
• 2 Inch to 4 Inch NPT • BSP or ISO228 Available • Quick Release
MATERIAL
• Cast Iron Housing with Stainless Steel Sleeve • Steel Shaft with Hardened Nickel Plating
CONFIGURATION OPTIONS
Mono Flow and Dual Flow Configurations Available

* See Performance Charts For Details

FEATURES & BENEFITS

Ideal For Steam Applications

- Designed for operation in a variety of steam applications.

Safety

- An anti-torque lug prevents rotation of the housing while in operation.

No Lubrication Needed

- The special carbon graphite bearing is lubricated by the process fluid and requires no additional lubrication.

Hot Oil Applications

- 8000HO offers the same design features as the standard 8000 Series but with a special high temperature seal ring for hot oil applications.

Stainless Steel Insert

- The stainless steel housing insert in the 8000T Series makes this joint a favorite in the textile industry

Part Numbers - 8000 Series Rotary Unions • Mono Flow

Nominal Pipe Size (A)	Inlet (B)	Left Hand Thread				Right Hand Thread				Quick Release			
		Standard Spring	Description	Heavy Duty Spring	Description	Standard Spring	Description	Heavy Duty Spring	Description	Standard Spring	Description	Heavy Duty Spring	Description
1/2	1/2	430483C	L8200P	730215C	L8200P-HD	430484C	R8200P	730216C	R8200P-HD	430533C	Q8200P	730214C	Q8200P-HD
3/4	3/4	430485C	L8300P	730223C	L8300P-HD	430486C	R8300P	730224C	R8300P-HD	430534C	Q8300P	730225C	Q8300P-HD
1	1	730856C	L8400-T	—	—	730857C	R8400-T	—	—	430535C	Q8400P	730232C	Q8400P-HD
1-1/4	1-1/4	430489C	L8500P	730244C	L8500P-HD	430490C	R8500P	730245C	R8500P-HD	430536C	Q8500P	730246C	Q8500P-HD
1-1/2	1-1/2	730496C	L8600P	730506C	L8600P-HD	730497C	R8600P	730507C	R8600P-HD	730498C	Q8600P	730508C	Q8600P-HD
2	2	460617C	L8700P	730269C	L8700P-HD	460618C	R8700P	730270C	R8700P-HD	460616C	Q8700P	730271C	Q8700P-HD
2-1/2	2	430495C	L8800P	730278C	L8800P-HD	430496C	R8800P	730279C	R8800P-HD	430539C	Q8800P	730280C	Q8800P-HD
3	2-1/2	430497C	L89 00P	730290C	L8900P-HD	430498C	R8900P	730291C	R8900P-HD	430540C	Q8900P	730292C	Q8900-HD
4	4	430501C	L81100P	730322C	L81100P-HD	430502C	R81100P	730323C	R81100P-HD	430542C	Q81100P	730324C	Q81100P-HD

Part Numbers - 8000 Series Rotary Unions • Dual Flow

Nominal Pipe Size (A)	Inlet (B)	Right Hand Thread				Left Hand Thread				Quick Release			
		Standard Spring	Description	Heavy Duty Spring	Description	Standard Spring	Description	Heavy Duty Spring	Description	Standard Spring	Description	Heavy Duty Spring	Description
1/2	1/2	430504C	R8200S	730219C	R8200S-HD	430503C	L8200S	703218C	L8200S-HD	430543C	Q8200S	730217C	Q8200S-HD
3/4	3/4	430506C	R8300S	730227C	R8300S-HD	430505C	L8300S	730226C	L8300S-HD	430544C	Q8300S	730228C	Q8300S-HD
1	1	730859C	R8400S-T	—	—	730858C	L8400S-T	—	—	430545C	Q8400S	730238C	Q8400S-HD
		730861C	XR8400S-T	—	—	730860C	XL8400S-T	—	—	430546C	XQ8400S	730235C	XQ8400S-HD
1-1/4	1-1/4	430512C	R8500S	730248C	R8500S-HD	430511C	L8500S	730247C	L8500S-HD	430547C	Q8500S	730249C	Q8500S-HD
1-1/2	1-1/2	730500C	R8600S	730523C	R8600S-HD	730499C	L8600S	730522C	L8600S-HD	730501C	Q8600S	730524C	Q8600S-HD
2	2	460648C	R8700S	730273C	R8700S-HD	460647C	L8700S	730272C	L8700S-HD	460595C	Q8700S	730274C	Q8700S-HD
2-1/2	2	430520C	R8800S	730285C	R8800S-HD	430517C	L8800S	730284C	L8800S-HD	430550C	Q8800S	730286C	Q8800S-HD
		430521C		730282C		430518C		730281C		430551C		730283C	
		430522C		730288C		430519C		730287C		430552C		730289C	
3	2-1/2	430526C	R8900S	730296C	R8900S-HD	430523C	L8900S	730293C	L8900S-HD	430553C	Q8900S	730299C	Q8900S-HD
		430527C		730297C		430524C		730294C		430554C		730300C	
		430528C		730298C		430525C		730295C		430555C		730301C	
4	4	430532C	R81100S	730326C	R81100S-HD	430531C	L81100S	730325C	L81100S-HD	430557C	Q81100S	730327C	Q81100S-HD

Part Numbers - 8000HO Series Rotary Unions • Mono Flow • Hot Oil

Nominal Pipe Size (A)	Right Hand Thread		Left Hand Thread		Quick Release	
	Part Number	Description	Part Number	Description	Part Number	Description
1/2	740226C	R8200P-HO	740225C	L8200P-HO	740227C	Q8200P-HO
3/4	740211C	R8300P-HO	740210C	L8300P-HO	740212C	Q8300P-HO
1	740242C	R8400P-HO	740241C	L8400P-HO	740243C	Q8400P-HO
1-1/4	740349C	R8500P-HO	740348C	L8500P-HO	740350C	Q8500P-HO
1-1/2	740279C	R8600P-HO	740278C	L8600P-HO	740280C	Q8600P-HO
2	740275C	R8700P-HO	740274C	L8700P-HO	740276C	Q8700P-HO
2-1/2	740425C	R8800P-HO	750026C	L8800P-HO	780995C	Q8800P-HO
3	740190C	R8900P-HO	740189C	L8900P-HO	740459C	Q8900P-HO

Part Numbers - 8000HO Series Rotary Unions • Dual Flow • Hot Oil

Nominal Pipe Size (A)	Right Hand Thread		Left Hand Thread		Quick Release	
	Part Number	Description	Part Number	Description	Part Number	Description
1/2	740222C	R8200S-HO	740221C	L8200S-HO	—	Q8200S-HO
3/4	740324C	R8300S-HO	740323C	L8300S-HO	740325C	Q8300S-HO
1	740321C	R8400S-HO	740320C	L8400S-HO	740322C	Q8400S-HO
1-1/4	740388C	R8500S-HO	740387C	L8500S-HO	740398C	Q8500S-HO
1-1/2	740282C	R8600S-HO	740281C	L8600S-HO	740283C	Q8600S-HO
2	740272C	R8700S-HO	740271C	L8700S-HO	740273C	Q8700S-HO
2-1/2	740314C	R8800S-HO	740313C	L8800S-HO	740315C	Q8800S-HO
	740267C		740266C		740268C	
3	740286C	R8900S-HO	740285C	L8900S-HO	740287C	Q8900S-HO

ROTARY UNION
8000 SERIES
STEAM & HOT OIL

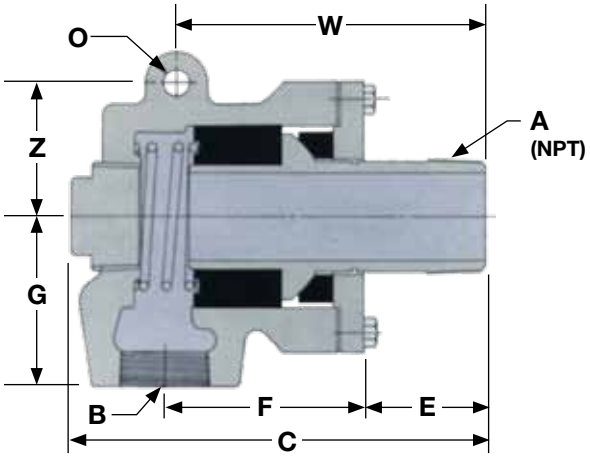

Mono Flow

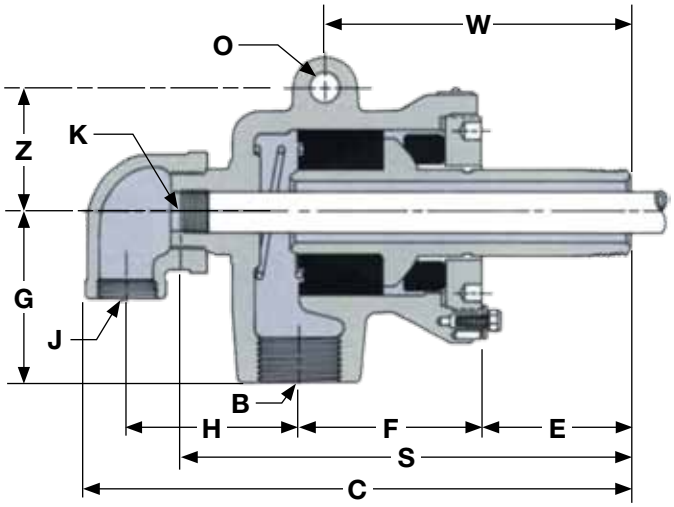

Dual Flow

Dimensions - 8000 Series Rotary Unions • Steam & Hot Oil • Mono Flow (Inch)

Nominal Pipe Size (A)	Inlet B (NPT)	F	E	G	Overall Length (C)	W	Z	O
1/2	1/2 Quick Release	2-1/2	2-1/8	2	6-1/4	4-7/16	1-5/8	15/32
3/4	3/4 Quick Release	2-1/2	2-3/16	2-3/8	6-3/8	4-11/16	1-13/16	15/32
1	1 Quick Release	2-3/4	2-5/16	2-5/8	7-1/8	4-7/8	1-7/8	15/32
1-1/4	1-1/4 Quick Release	3-3/16	2-1/2	3	8-1/8	5-5/8	2-1/8	5/8
1-1/2	1-1/2 Quick Release	3-3/4	2-1/2	3-1/2	8-13/16	6	2-7/8	5/8
2	2 Quick Release	4	2-9/16	4	9-1/2	6-9/16	3-1/8	5/8
2-1/2	2 Quick Release	5-3/16	3-3/16	4-7/16	10-7/8	8	3-9/16	11/16
3	2-1/2 Quick Release	5-3/4	3-5/8	4-9/16	12-3/16	8-1/2	3-31/32	7/8
4	4 Quick Release	8-1/8	5-7/16	6-5/16	16-7/8	13-1/2	5-1/8	1-3/32

Dimensions - 8000 Series Rotary Unions • Steam & Hot Oil • Dual Flow (Inch)

Nominal Pipe Size (A)	Inlet B (NPT)	Outlet J (NPT)	Siphon Tap K (NPSM)	C	F	E	G	S	W	Z	O	H
1/2	1/2	1/2	1/8	7-1/2	2-1/2	2-1/8	2	6-1/16	4-7/16	1-5/8	15/32	2-1/4
3/4	3/4	1/2	1/4	7-11/16	2-1/2	2-3/16	2-3/8	6-1/4	4-11/16	1-13/16	15/32	2-5/16
1	1	1/2	3/8	8-3/4	2-3/4	2-5/16	2-5/8	6-15/16	4-7/8	1-7/8	15/32	2-5/8
		1/2	1/4									
1-1/4	1-1/4	1/2	1/2	9-1/16	3-3/16	2-1/2	3	7-7/8	5-5/8	2-1/8	5/8	3-1/8
1-1/2	1-1/2	3/4	3/4	10-3/8	3-3/4	2-1/2	3-1/2	8-5/8	6	2-7/8	5/8	3-9/16
2	2	1	3/4	11-11/16	4	2-9/16	4	9-1/2	6-9/16	3-1/8	5/8	4
2-1/2	2	1-1/4	3/4	14-1/8	5-3/16	3-3/16	4-7/16	11-1/4	8	3-9/16	11/16	5-1/16
			1									
			1-1/4									
3	2-1/2	1-1/4	1	17	5-3/4	3-5/8	4-9/16	12-1/2	8-1/2	3-32/32	7/8	5-9/16
		1-1/4	1-1/4									
		1-1/2	1-1/2									
4	4	2-1/2	2	24-1/4	8-1/8	5-7/16	6-5/16	18-1/8	13-1/2	5-1/8	1-3/32	7/3/4

www.duffnorton.com • Ph: (800) 477-5002 • Fax: (704) 588-1994

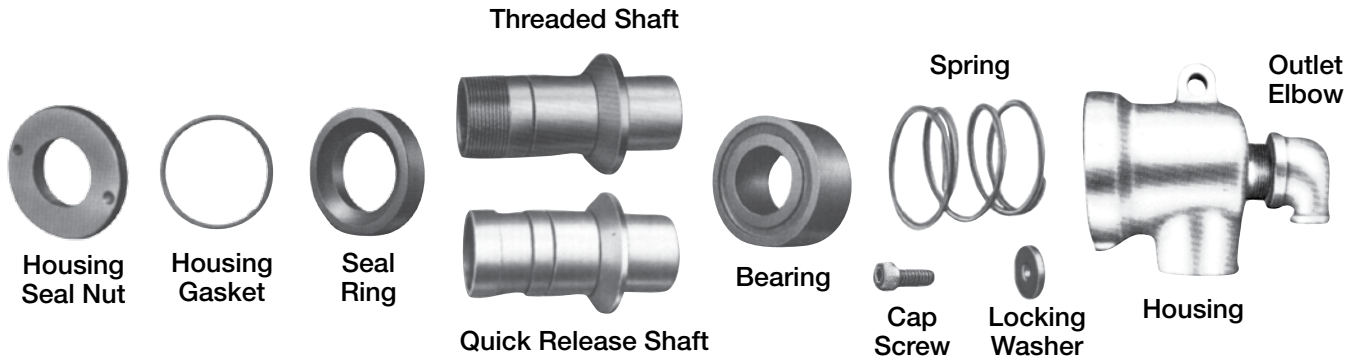

Repair Parts - 8000 Series Rotary Unions • 1/2 to 1-1/4 inch • Steam Only

Nominal Pipe Size	Mono Flow Housing	Dual Flow Housing	Rotating Siphon Housing Part Number	LH Shaft (NPT)	RH Shaft (NPT)	Quick Release Shaft	Graphite Bearing	8000 Series Spring	8000 Series Hot Oil Heavy Duty Spring
1/2	487240C	487242C	Contact Factory	471050C	471051C	471818C	484247C	484246C	487912C
3/4	487248C	487252C	Contact Factory	481759C	481760C	471894C	484005C	484039C	487909C
1	487153C	487148C	441147C	441878C	441879C	471094C	484007C	484026C	487872C
1-1/4	487214C	487217C	Contact Factory	481753C	481754C	471095C	484009C	484033C	487911C

Nominal Pipe Size	Graphite Seal Ring	Housing Gasket	Housing Seal Nut	Lock Washer	Socket Head Cap Screw	Rotating Siphon Models Only		
						Outlet Elbow	Siphon Packing Nut	Siphon Packing Ring Set
1/2	484245C	484361C	487239C	484037C	854295C	487234C	482039C	482745C
3/4	484004C	484038C	487304C			487235C	482038C	481473C
1	484006C	484025C	487159C	484023C		487160C	482040C	481475C
1-1/4	484008C	484032C	487213C	484031C		487212C	482041C	471476C

Repair Parts - 8000 Series Rotary Unions • 1-1/2 to 4 inch • Steam Only

Nominal Pipe Size	Mono Flow Housing	Dual Flow Housing	Rotating Siphon Housing Part Number	LH Shaft (NPT)	RH Shaft (NPT)	Quick Release Shaft	Graphite Bearing	8000 Series Spring	8000 Series Hot Oil Heavy Duty Spring
1-1/2	Contact Factory	Contact Factory	n/a	481756C	481757C	471096C	484011C	484034C	487910C
2				471055C	471056C	471097C	484301C	484300C	487903C
2-1/2				471777C	471776C	471775C	485416C	485415C	463306C
3				471796C	471795C	471797C	485467C	485466C	487305C
4				471838C	471837C	471836C	485594C	485595C	463025C

Nominal Pipe Size	Graphite Seal Ring	Housing Gasket	Housing Flange	Housing Cap Screw	Housing Plug for Mono Flow Models	Outlet Elbow for Dual Flow Models Only	Siphon Packing Nut for RSP Models	Siphon Packing Ring for RSP Models
1-1/2	484010C	463514C	463513C	855366C	n/a	487171C	482042C	481477C
2	484249C	487927C	487926C	855236C		487155C		
2-1/2	485420C	485421C	487208C	485545C	Contact Factory	487209C	n/a	n/a
3	485470C	485471C	487236C	485545C		487303C		
4	485596C	485593C	487238C	485605C		487329C		

Performance Charts

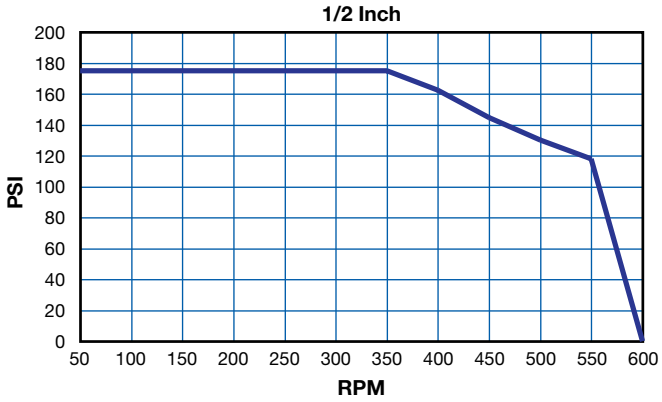

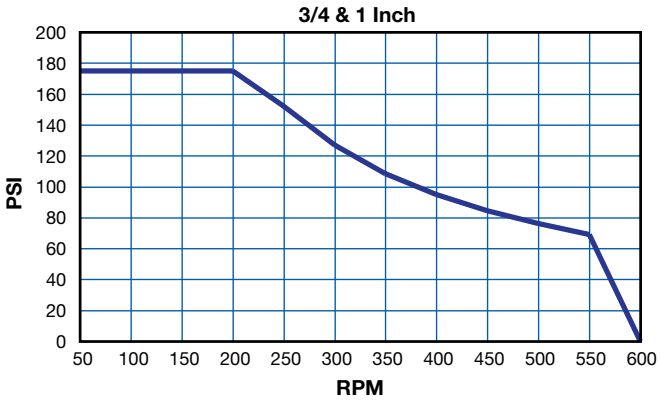

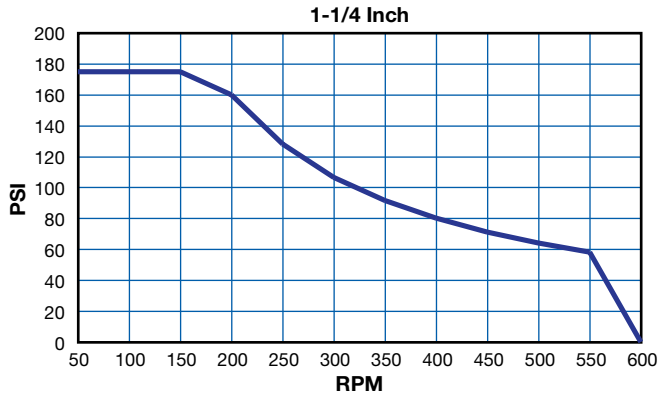

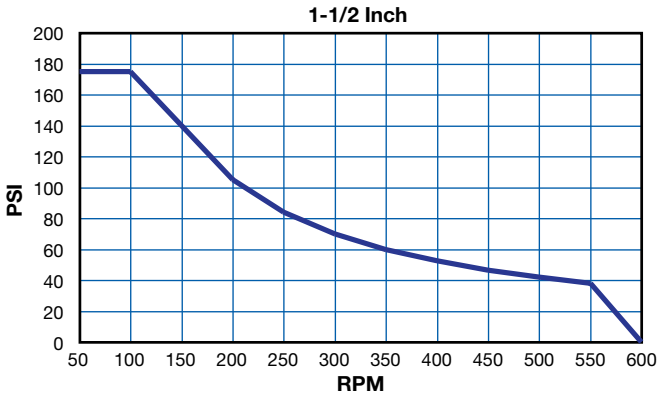

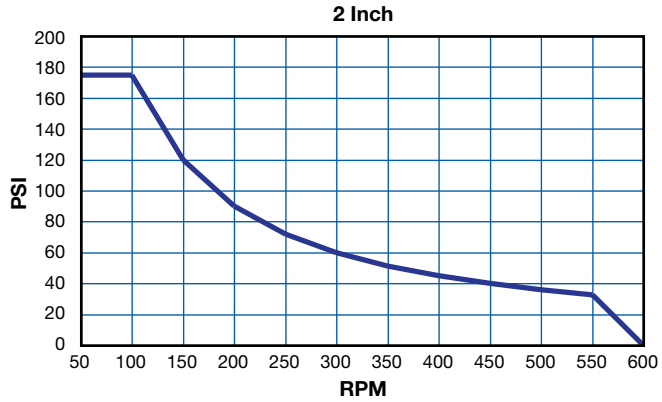

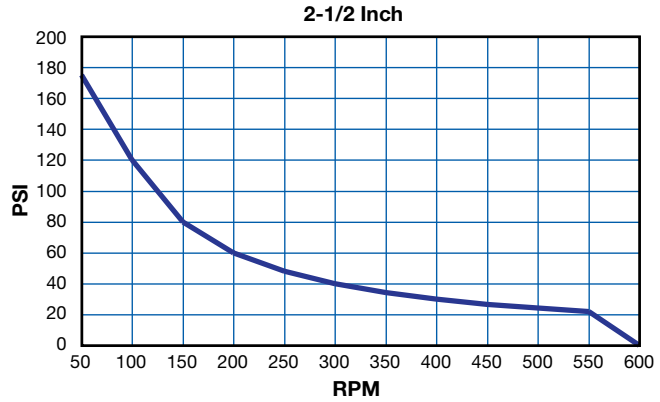

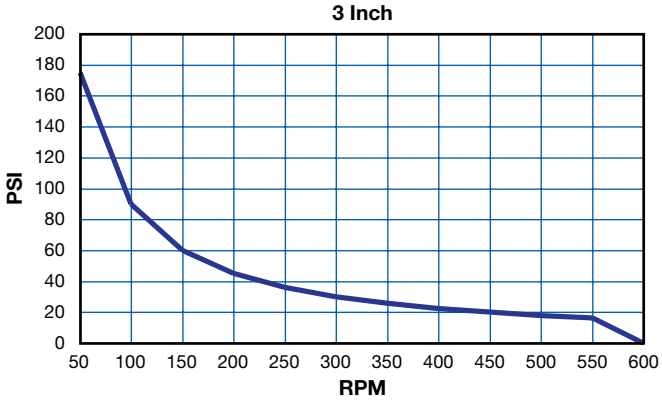

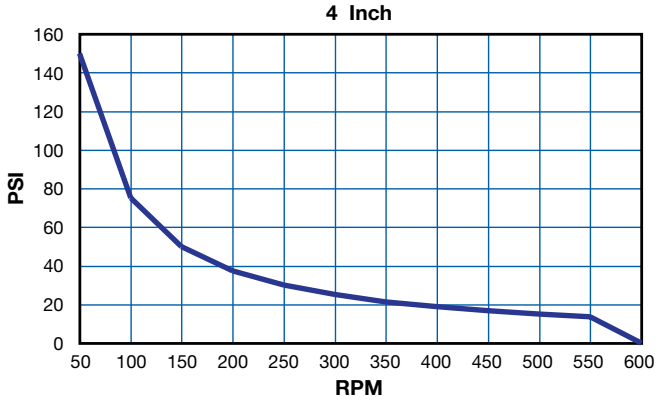

Performance Charts

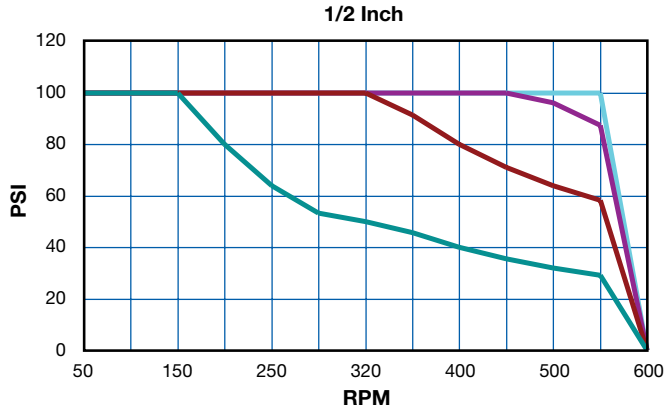

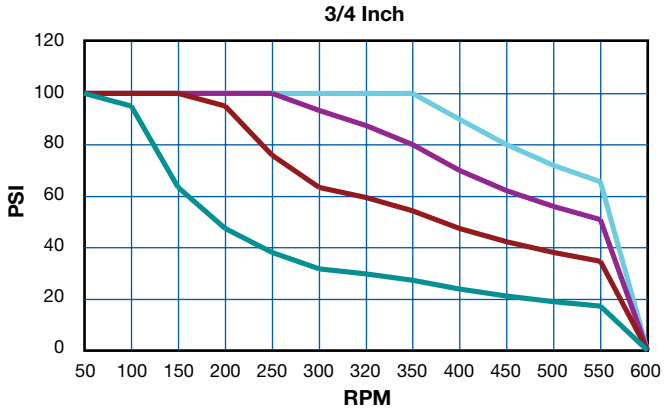

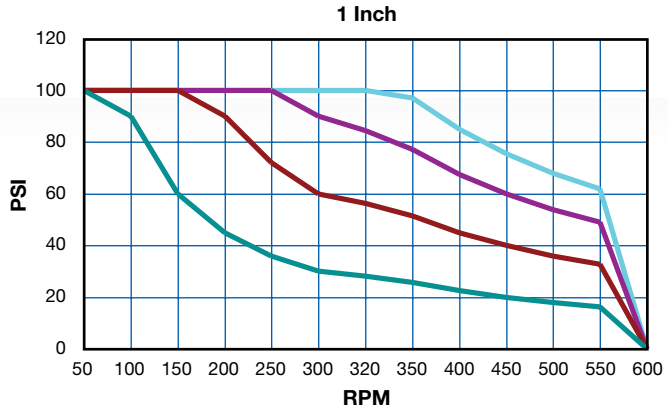

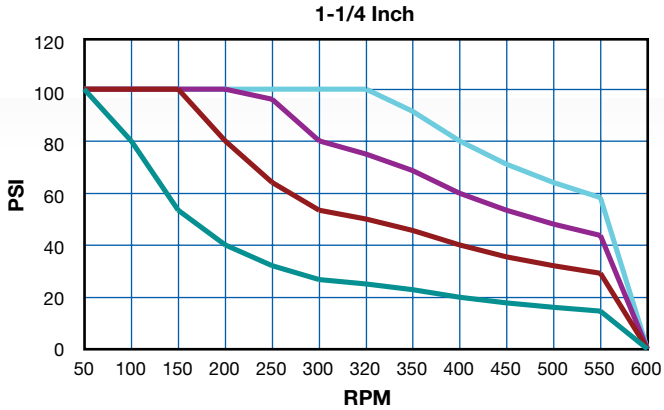

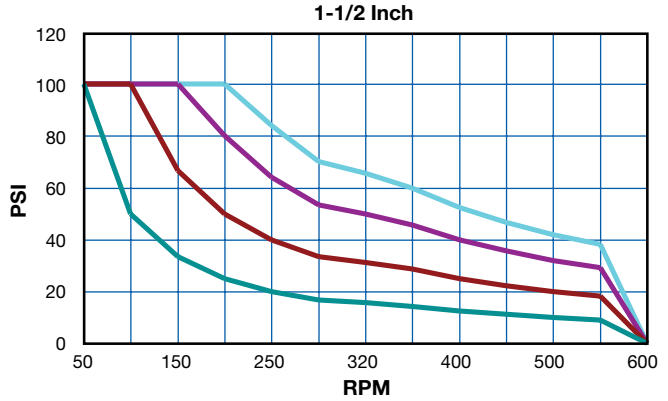

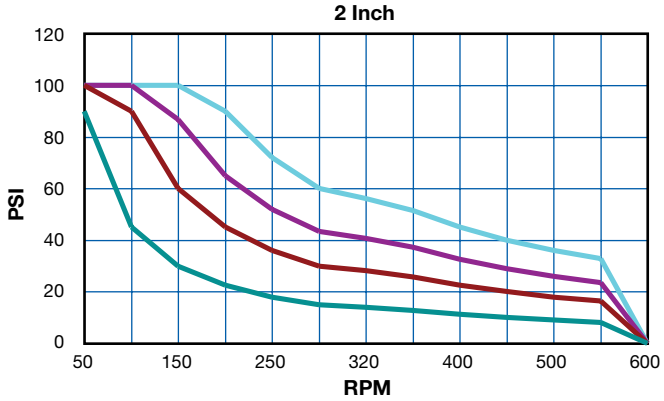

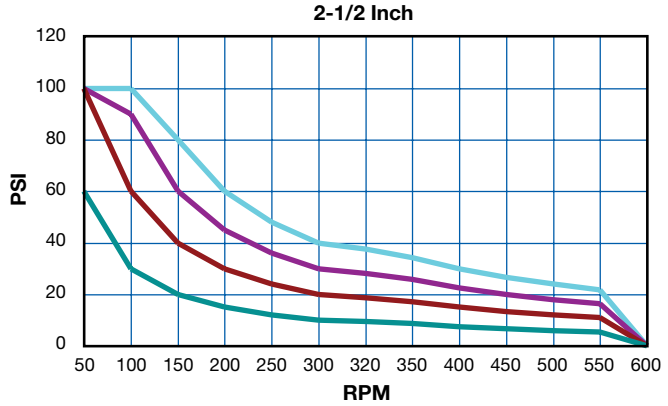

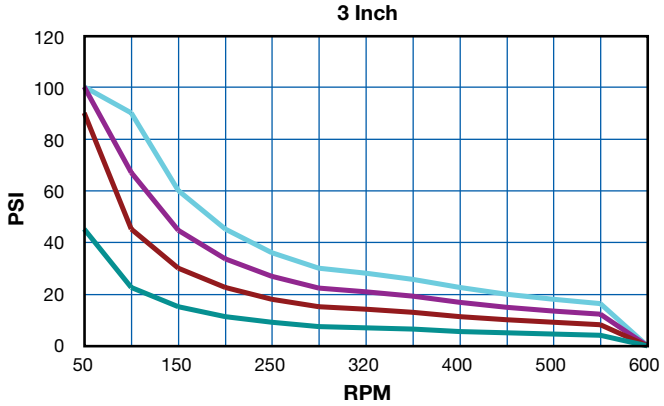

600° 550° 500° 450°

ROTARY UNION

9000G SERIES

WATER, STEAM & HOT OIL
HIGH TEMPERATURE

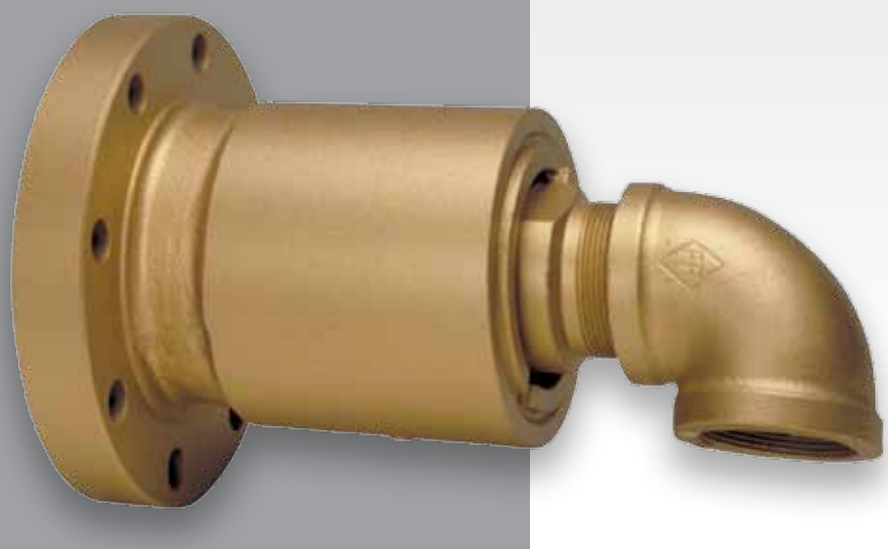

MODELS ADDED

Operating Parameters

MEDIA
Water, Steam, Hot Oil
PRESSURE*
250 psi (Water), 175 psi (Steam), 100 psi (Hot Oil)
TEMPERATURE*
600° F (Hot Oil), 378° F (Steam)
SPEED*
700 RPM
THREADS
• 1/4 Inch to 3 Inch NPT • BSP Threads Available • Flange
MATERIAL
• Cast Iron Housing with Stainless Steel or Plated Sleeve • Steel Shaft
CONFIGURATION OPTIONS
Mono Flow and Dual Flow Configurations Available

* See Performance Charts For Details

FEATURES & BENEFITS

Superior Sealing Performance

- Bellows Sealing System provides superior sealing performance throughout the wear life of the Rotary Union.

Designed For Dirty Media Applications

- Debris in contaminated media will not be captured in the Bellows Sealing System, which reduces clogging.

Maintenance Free

- The 9000G is maintenance free because there is no rolling element bearing, therefore no lubrication is required.

High Temperature Applications

- Offers the same design as the standard 9000 Series, but utilizes carbon graphite bearings for high temperature applications.

Ideal For High Temperatures

- The thrust collar allows for thermal expansion, making this an ideal union for high temperature, general purpose applications.

Flanged Mounted Units Available

- Consult Factory.

Part Numbers - 9000G Series High Temperature Rotary Unions • Mono Flow

Nominal Pipe Size	Shaft Thread (A)	Right Hand Thread			Left Hand Thread		
		Part Number	Description	Repair Cartridge	Part Number	Description	Repair Cartridge
1/4	1/4	480630C	R050P	481323C	480629C	L050P	481322C
3/8	3/8	480632C	R150P	481325C	480631C	L150P	481324C
1/2	1/2	480198C	R250P	481204C	480197C	L250P	481203C
3/4	3/4	480247C	R350P	481208C	480246C	L350P	481207C
1	1	430111C	R450P-8	471882C	430110C	L450P-8	471881C
1-1/4	1-1/4	440581C	R9550P	471665C	440580C	L9550P	471664C
1-1/2	1-1/2	440165C	R9650P	471575C	440164C	L9650P	471576C
2	2	440469C	R9750P	471716C	440468C	L9750P	471715C
2-1/2	2-1/2	440577C	R9850P	471718C	440576C	L9850P	471717C
3	3	440505C	R9950P	471720C	440504C	L9950P	471719C

Part Numbers - 9000G Series High Temperature Rotary Unions • Dual Flow

Nominal Pipe Size	Shaft Thread (A)	Right Hand Thread			Left Hand Thread		
		Part Number	Description	Repair Cartridge	Part Number	Description	Repair Cartridge
1/2	1/2	480204C	R250S	481204C	480203C	L250S	481203C
3/4	3/4	480253C	R350S	481208C	480252C	L350S	481207C
1	1	430113C	R450S-8	471882C	430112C	L450S-8	471881C
1-1/4	1-1/4	440583C	R9550S	471665C	440582C	L9550S	471664C
1-1/2	1-1/2	440167C	R9650S	471575C	440166C	L9650S	471576C
2	2	440471C	R9750S	471716C	440470C	L9750S	471715C
2-1/2	2-1/2	440579C	R9850S	471718C	440578C	L9850S	471717C
3	3	440507C	R9950S	471720C	440506C	L9950S	471719C

Mono Flow

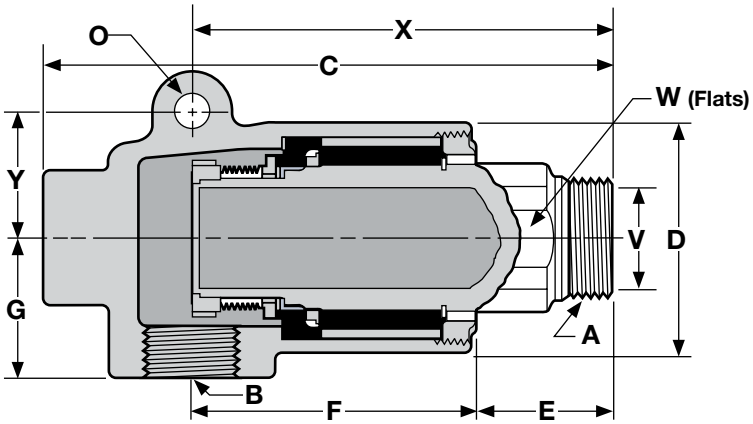

Dimensions - 9000G Series High Temperature Rotary Unions • Mono Flow (Inch)

Nominal Pipe Size	Shaft Thread (A)	Right Hand Thread			Left Hand Thread			Inlet Thread (B)	C	D	E	F	G	O	V	W	X	Y
		Part Number	Description	Repair Cartridge	Part Number	Description	Repair Cartridge											
1/4	1/4	480630C	R050P	481323C	480629C	L050P	481322C	1/4	4-3/8	1-3/4	1-1/8	2-9/16	1-1/16	—	1/4	5/8	—	—
3/8	3/8	480632C	R150P	481325C	480631C	L150P	481324C	3/8	4-3/8	1-3/4	1-1/8	2-9/16	1-1/16	—	3/8	11/16	—	—
1/2	1/2	480198C	R250P	481204C	480197C	L250P	481203C	1/2	5	2-3/8	1-1/2	2-3/4	1-1/4	—	1/2	15/16	—	—
3/4	3/4	480247C	R350P	481208C	480246C	L350P	481207C	3/4	5-1/2	2-1/2	1-5/8	3	1-7/16	—	3/4	1-3/32	—	—
1	1	430111C	R450P-8	471882C	430110C	L450P-8	471881C	1	6-1/8	3	1-3/4	3-3/8	1-3/4	—	1	1-11/32	—	—
1-1/4	1-1/4	440581C	R9550P	471665C	440580C	L9550P	471664C	1-1/4	9-1/16	3-3/4	2-1/16	4-13/16	2-3/16	5/8	1-1/4	1-11/32	6-7/8	2
1-1/2	1-1/2	440165C	R9650P	471575C	440164C	L9650P	471576C	1-1/2	9-11/16	4-1/8	2-3/16	5-1/4	2-3/16	5/8	1-1/2	1-15/16	7-3/8	2-1/4
2	2	440469C	R9750P	471716C	440468C	L9750P	471715C	2	11-3/4	5-7/8	2-7/16	6-7/16	2-5/8	5/8	2	2-9/16	8-9/16	2-3/4
2-1/2	2-1/2	440577C	R9850P	471718C	440576C	L9850P	471717C	2-1/2	15-3/8	7-1/8	3-1/2	7-3/16	3-3/8	—	2-1/2	3	—	—
3	3	440505C	R9950P	471720C	440504C	L9950P	471719C	3	15-3/4	7-1/8	3-7/8	8-5/16	3-7/8	—	3	3-5/8	—	—

ROTARY UNION
9000G SERIES
WATER, STEAM & HOT OIL HIGH TEMPERATURE

Dual Flow

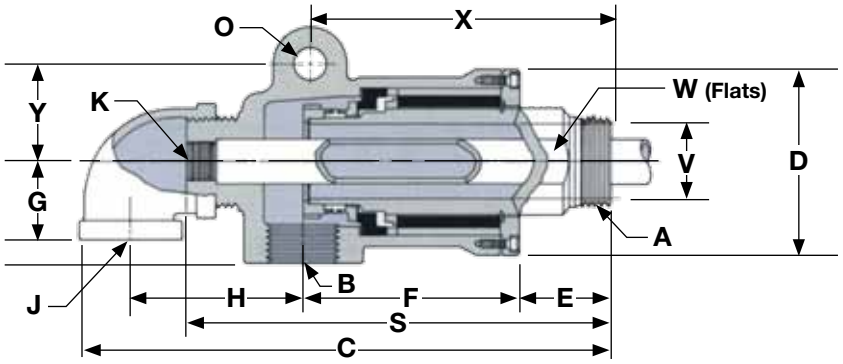

Dimensions - 9000G Series High Temperature Rotary Unions • Dual Flow (Inch)

Nominal Pipe Size	Shaft Thread (A)	Inlet (B)	Outlet (J)	Siphon K (NPSM)	C	D	E	F	G	H	O	S	V	W	X	Y
1/2	1/2	1/2	1/2	1/8	7-1/4	2-3/8	1-1/2	2-3/4	1-1/4	2-1/8	—	6	1/2	15/16	—	—
3/4	3/4	3/4	1/2	1/4	7-3/4	2-1/2	1-5/8	3	1-7/16	2-3/8	—	6-3/8	3/4	1-3/32	—	—
1	1	1	1/2	3/8	8-1/2	3	1-3/4	3-3/8	1-3/4	2-5/8	—	7-1/8	1	1-11/32	—	—
1-1/4	1-1/4	1-1/4	1/2	1/2	10-5/8	3-3/4	2-1/8	4-13/16	2	3	5/8	8-7/8	1-1/4	1-11/16	6-7/8	2
1-1/2	1-1/2	1-1/2	3/4	3/4	11-3/8	4-1/8	2-3/16	5-1/4	2-3/16	3-1/4	5/8	9-9/16	1-1/2	1-15/16	7-3/8	2-1/4
2	2	2	1	3/4	13-7/8	5	2-7/16	6-1/2	2-5/8	4-1/16	5/8	11-1/2	2	2-9/16	8-9/16	2-3/4
2-1/2	2-1/2	2	1-1/4	1	16-7/8	6-1/2	3-1/2	7-1/4	3-3/8	5	—	14	2-1/2	3	—	—
3	3	2-1/2	1-1/4	1-1/4	18-3/4	7-1/8	3-1/2	8-5/16	3-7/8	5-1/2	—	15-5/8	3	3-5/8	—	—

Dual Flow Flange

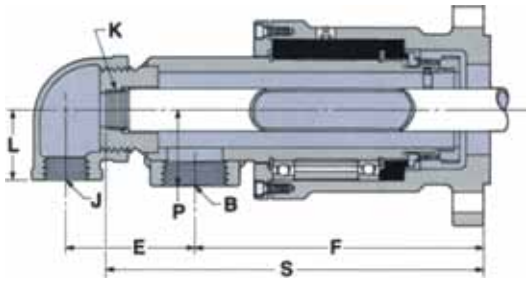

RSP Flange

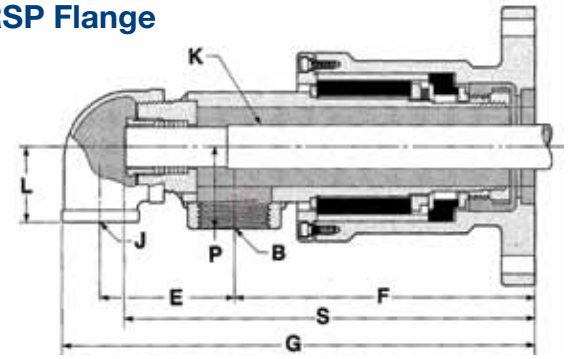

Dimensions - 9000G Series High Temperature Rotary Unions • Dual Flow • Flange (Inch)

Shaft ID (A)	Part Number	Description	Repair Cartridge	Shaft ID (A)	Inlet B (NPT)	Outlet J (NPT)	Siphon Tap K (NPSM)	E	F	S	L	P
1-1/4	Consult Factory	580S-2-U	Consult Factory	1-1/4	1	1/2	1/2	2-3/4	7-1/16	8-7/8	1-5/8	1-5/8
1-1/2		680S-2-U		1-1/2	1-1/4	3/4	3/4	3-3/8	7-11/16	9-15/16	1-13/16	1-7/8
2		780S-2-U		2	1-1/2	1	3/4	3-13/16	9-1/16	11-1/2	2-1/16	2-5/16
2-1/2		880S-2-U		2-1/2	2	1-1/4	1	4-3/4	10-5/16	13-9/16	2-5/8	2-5/8
3		980S-2-U		3	2-1/2	1-1/4	1-1/4	5-1/4	11-7/8	15-1/2	2-7/8	3-1/16
4		1080S-1-U		4	Consult Factory			—	—	—	—	—
5		1180S-1-U		5				—	—	—	—	—

Models Added

Dimensions - 9000G Series High Temp. Rotary Unions • Rotating Siphon Pipe • Flange (In)

Shaft ID	Part Number	Description	Repair Cartridge	Shaft ID	Inlet B (NPT)	Outlet J (NPT)	Siphon Size K (NPSM)	Max. Siphon Size	E	F	G	L	P	S
1-1/4	Consult Factory	588-20-U	Consult Factory	1-1/4	1	1/2	1/2	1/2	2-3/4	7-1/16	10-7/16	1-5/8	1-5/8	9-1/2
1-1/2		688-30-U		1-1/2	1-1/4	3/4	3/4	3/4	3-3/8	7-11/16	11-13/16	1-13/16	1-7/8	10-3/4
2		788-30-U		2	1-1/2	1	3/4	1	3-13/16	9-1/16	13-3/4	2-1/16	2-5/16	12-1/4
2-1/2		888-40-U		2-1/2	2	1-1/4	1	1-1/2	4-3/4	10-5/16	16-1/2	2-5/8	2-5/8	14-1/4
3		988-50-U		3	2-1/2	1-1/4	1-1/4	2	5-1/4	11-7/8	18-3/16	2-7/8	3-1/16	16-1/4
4		Consult Factory		4	Consult Factory			2-1/2	—	—	—	—	—	—
5				5				3	—	—	—	—	—	—

Models Added

www.duffnorton.com • Ph: (800) 477-5002 • Fax: (704) 588-1994

Performance Charts

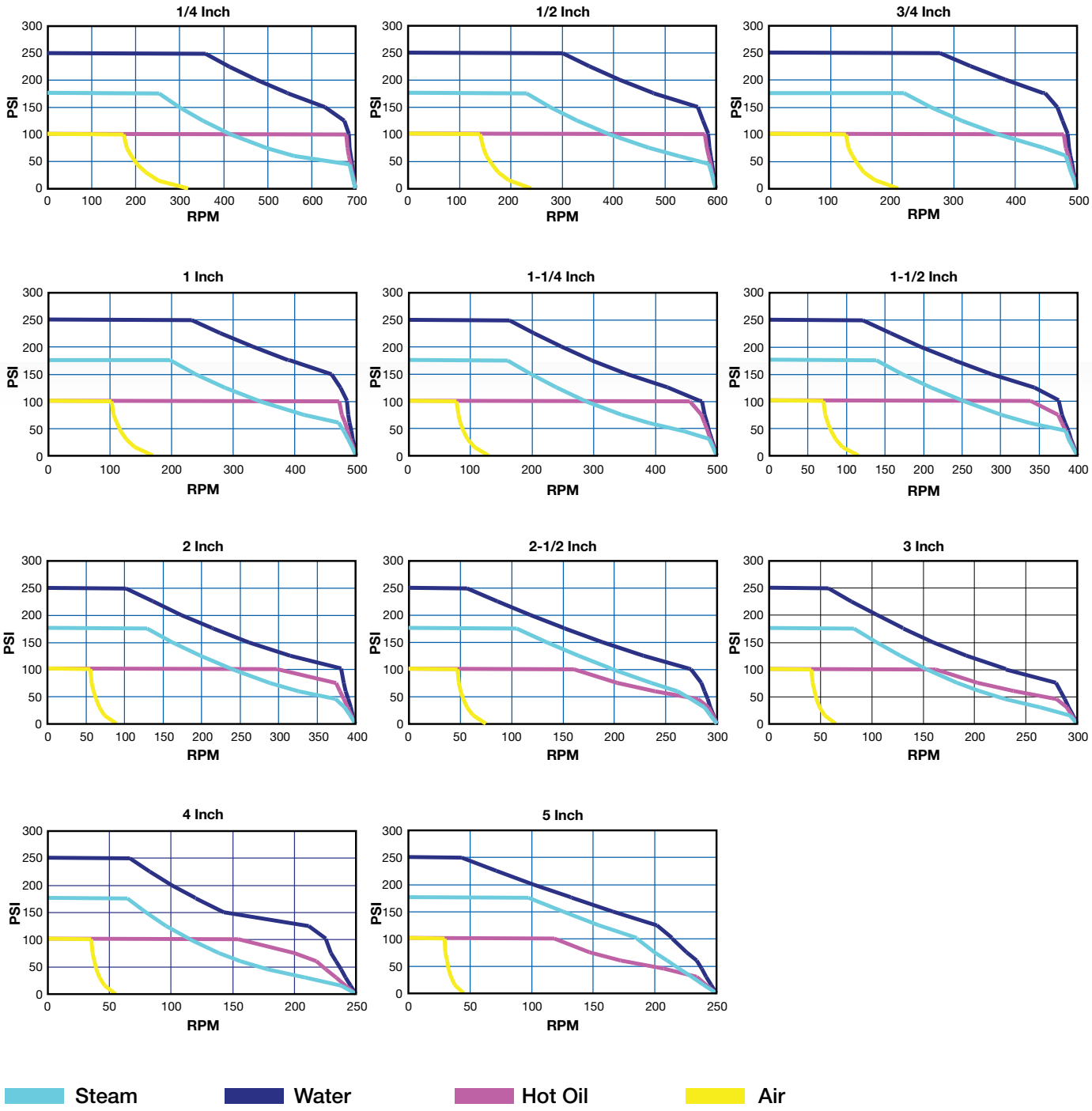

ROTARY UNION
HPMC • HSMC SERIES
MULTI-PORT ROTARY UNIONS

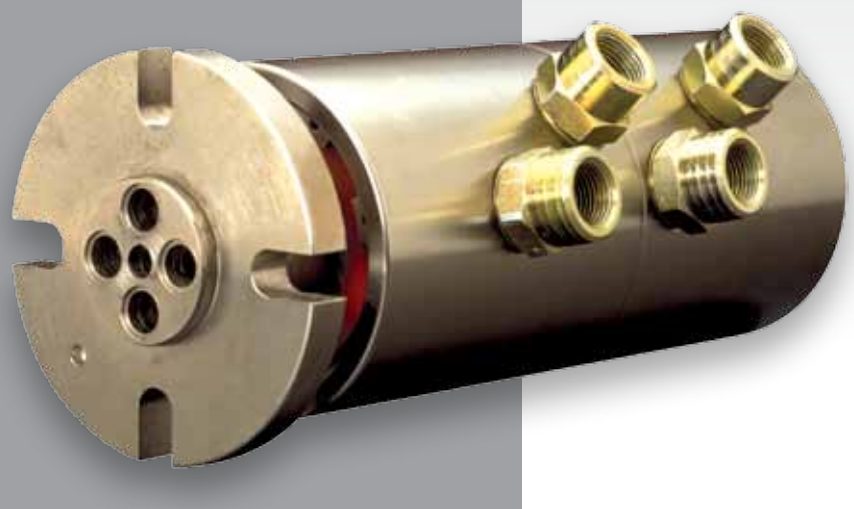

Operating Parameters
MEDIA
Water, Air, Hydraulic Fluid
PRESSURE*
170 psi (HSMC), 5,880 psi (HPMC)
TEMPERATURE*
248° F (HSMC & HPMC)
SPEED*
3,000 RPM (HSMC), 180 RPM (HPMC)
THREADS
3/8 Inch to 3/4 Inch NPT or BSP
MATERIAL
• Nickel Plated Steel
STANDARD NUMBER OF PORTS
Mono Flow and Dual Flow Configurations Available
2 to 8

* See Performance Charts For Details

FEATURES & BENEFITS

High Pressure Or High Speed Applications

- Duff-Norton multi-port Rotary Unions are available in both high pressure (HPMC Series) and high speed (HSMC Series) configurations.

Pressures Up To 5,880 psi

- HPMC Series Rotary Unions are designed for higher pressure, available with up to eight ports as standard and are suitable for use in low speed applications for pressures up to 5,880 psi.

Available Up To 8 Ports

- HSMC Series Rotary Unions are available with up to four ports as standard. HPMC Series Rotary Unions offer up to eight ports as standard.

Speeds Up To 3,000 RPM

- HSMC Series is perfect for low pressure applications, up to 170 psi with rotational speeds up to 3,000 RPM.

No Cross Contamination

- Feel free to run dissimilar fluids through Duff-Norton Multi-Port Rotary Unions as each port is always individually sealed eliminating cross contamination between circuits.

HPMC Series

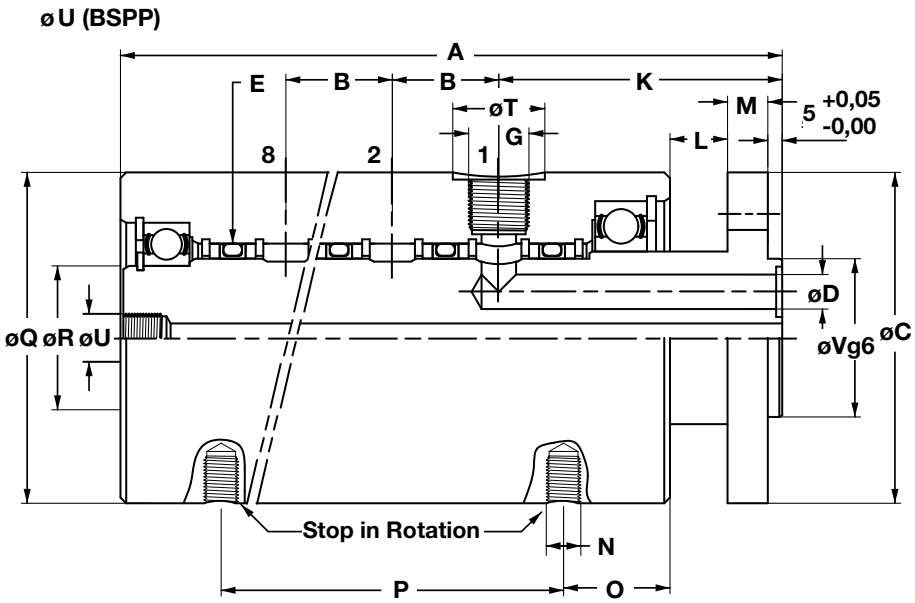

HPMC End

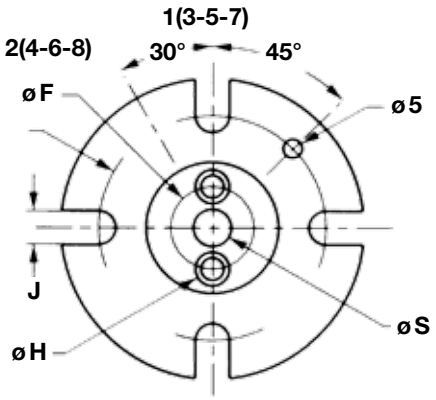

HPMC Multi-Port Rotary Unions (Inch)

No. of Ports	Part No.	Description	A	B	C	D	E & Vg65	F	G (NPT)	H	Ref. O-Ring	I	J	K	L	M	N	O	P	Q	R	S	T	U
2	750748C	RMC206R2KNPT	5.89																2.26					
3	750749C	RMC306R2KNPT	6.93																3.31					
4	750750C	RMC406R2KNPT	7.97	1.04	3.15		35	0.87				2.36	0.35	3.05	0.59	0.39			4.35	3.15	1.18	0.39		3/8
5	750751C	RMC506R2KNPT	9.02			0.24			1/8	0.35	06X01.5						M8	1.26	5.39				0.71	
6	750752C	RMC606R2KNPT	10.06																6.44					
7	750753C	RMC706R2KNPT	12.32	1.14	3.94		40	1.06				2.83	0.43	3.50	0.79	0.47			8.43	3.54	1.38	0.47		1/2
8	750754C	RMC806R2KNPT	13.46																9.57					
2	750755C	RMC208R2KNPT	6.77																2.87					
3	750756C	RMC308R2KNPT	7.99	1.22	3.94		40	0.94				2.83		3.54		0.47		1.26	4.09	3.54	1.38	0.31		1/4
4	750757C	RMC408R2KNPT	9.21																5.31					
5	750758C	RMC508R2KNPT	10.43			0.31			1/4	0.47	R6A		0.43		0.79		M10		6.54			0.39	0.87	3/8
6	750759C	RMC608R2KNPT	12.48																8.11					
7	750760C	RMC708R2KNPT	13.78	1.30	4.53		55	1.48				3.39		3.80		0.55		1.46	9.41	4.53	1.97	0.47		1/2
8	750761C	RMC808R2KNPT	15.08																10.71					
2	750762C	RMC210R2KNPT	6.93																3.03					
3	750763C	RMC310R2KNPT	8.23	1.30	3.94		40	0.94				2.83		3.58		0.47		1.26	4.33	3.54	1.38	0.31		1/4
4	750764C	RMC410R2KNPT	9.53										0.43		0.79		M10		5.63					
5	750765C	RMC510R2KNPT	11.57			0.39			3/8	0.49	10X01.3								7.20				0.98	
6	750766C	RMC610R2KNPT	12.95	1.38	4.53		55	1.34				3.39		3.84		0.55		1.46	8.58	4.53	1.97	0.47		1/2
7	750767C	RMC710R2KNPT	14.33																9.96					
8	750768C	RMC810R2KNPT	16.26		5.51		70	1.85				4.25	0.51	4.27	0.98	0.59	M12	1.57	11.42	5.31	2.56	0.71		3/4
2	750769C	RMC212R2KNPT	7.60																3.23					
3	750770C	RMC312R2KNPT	9.06	1.46	4.53		55	1.26				3.39	0.43	3.88	0.79	0.55		1.46	4.69	4.53	1.97	0.39		3/8
4	750771C	RMC412R2KNPT	10.51																6.14					
5	750772C	RMC512R2KNPT	12.52		5.51	0.47	70	1.65	1/2	0.69	R10	4.25	0.51	4.31	0.98	0.59	M12	1.57	7.72	5.31	2.56	0.47	1.26	1/2
6	750773C	RMC612R2KNPT	15.20																9.72					
7	750774C	RMC712R2KNPT	16.73	1.54	6.69		90	2.13				5.20	0.67	4.80	1.18	0.63		1.77	11.26	6.30	3.35	0.71		3/4
8	750775C	RMC812R2KNPT	18.27																12.80					
2	750776C	RMC218R2KNPT	8.66																3.86					
3	750777C	RMC318R2KNPT	10.35	1.69	5.51	0.71	70	1.50	3/4	0.94	R14	4.25	0.51	4.43	0.98	0.59	M12	1.57	5.55	5.31	2.56	0.39	1.46	3/8
4	750778C	RMC418R2KNPT	12.05																7.24					
5	750779C	RMC518R2KNPT	14.84	1.77	6.69		90	2.20				5.20	0.67	4.92	1.18	0.63		1.77	9.37	6.30	3.35	0.71		
2	750780C	RMC225R2KNPT	10.08																4.61					
3	750781C	RMC325R2KNPT	12.13	2.05	6.69	0.98	90	1.97	1	1.26	R19	5.20	0.67	5.06	1.18	0.63	M14	1.77	6.65	6.30	3.35	0.47	1.69	1/2
4	750782C	RMC425R2KNPT	14.17																8.70					
5	750783C	RMC525R2KNPT	17.32	2.17	7.48		105	2.72				5.91		5.41				2.05	11.38	7.48	3.94	0.71		3/4
2	750784C	RMC231R2KNPT	11.30																5.35					
3	750785C	RMC331R2KNPT	13.70	2.40	7.48	1.22	105	2.24	1-1/4	1.44	R22	5.91	0.67	5.53	1.18	0.63	M14	2.05	7.76	7.48	3.94	0.47	2.17	1/2
4	750786C	RMC431R2KNPT	16.10																10.16					
5	750787C	RMC531R2KNPT	20.87	2.64	9.06		140	3.43				7.24		6.28		0.79	M16	2.44	13.90	9.06	5.12	0.71		3/4

HPMC • HSMC SERIES

MULTI-PORT ROTARY UNIONS

HPMC Series

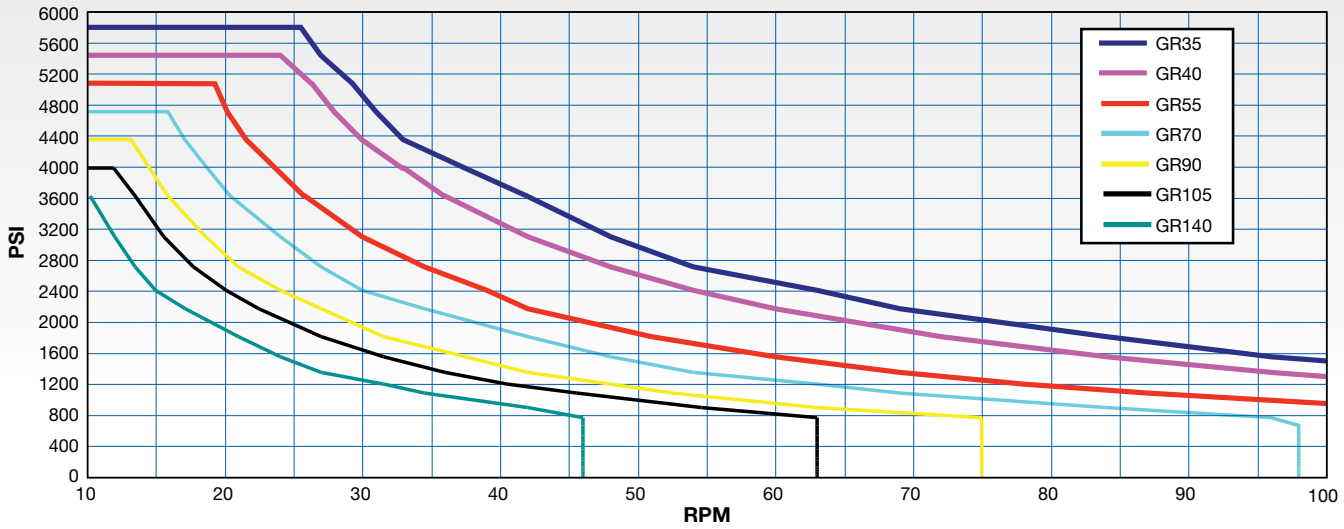

HPMC Series Over 100 RPM

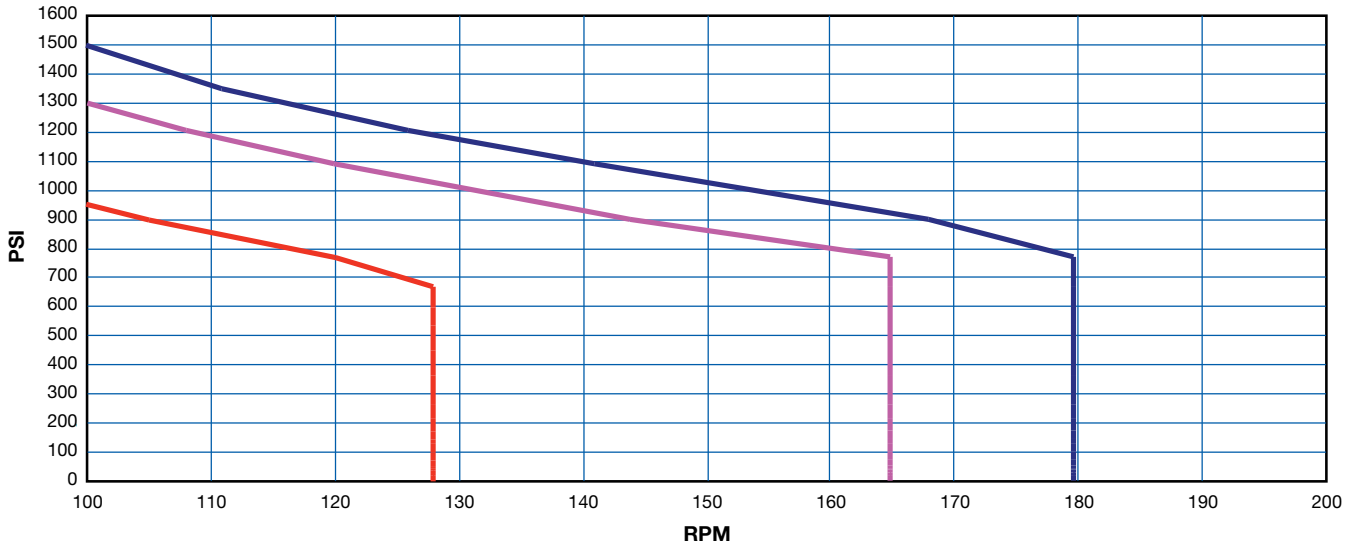

GR Seals - High Pressure Multi-Circuit Models*

GR35	GR40	GR55	GR70	GR90	GR105	GR140
MC206R2K	MC706R2K	MC608R2K	MC810R2K	MC612R2K	MC525R2K	MC531R2K
MC306R2K	MC806R2K	MC708R2K	MC512R2K	MC712R2K	MC231R2K	
MC406R2K	MC208R2K	MC808R2K	MC218R2K	MC812R2K	MC331R2K	
MC506R2K	MC308R2K	MC510R2K	MC318R2K	MC518R2K	MC431R2K	
MC606R2K	MC408R2K	MC610R2K	MC418R2K	MC618R2K		
	MC508R2K	MC710R2K		MC225R2K		
	MC210R2K	MC212R2K		MC325R2K		
	MC310R2K	MC312R2K		MC425R2K		
	MC410R2K	MC412R2K				

* GR Seals are used in these high pressure multi-circuit models

Performance charts are for oil, grease or similar lubricating media. For media such as water or air, reduce the maximum recommended speed as follows:

For Water: Multiply speed by 0.67

For Air: Multiply speed by 0.33

Where maximum recommended speeds are found on the horizontal axis.

HSMC Series

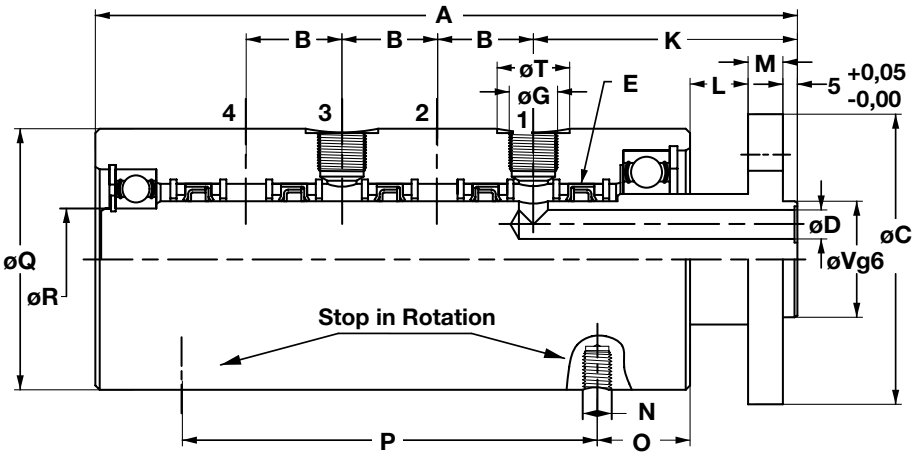

HSMC End

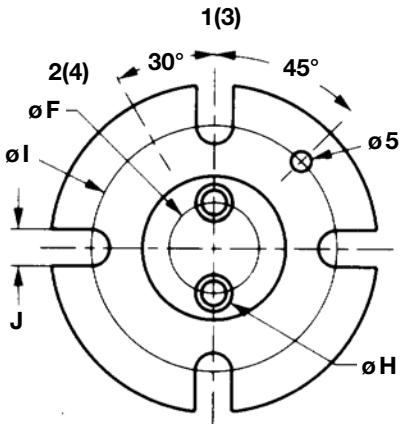

HSMC Multi-Port Rotary Unions (Inch)

No. of Ports	Part Number	Description	A	B	C	D	V	F	G (NPT)	H	Ref. O-Ring	I	J	K	L	M	N	O	P	Q	R	T
2	750889C	RMC206RVRKNPT	5.89																2.26			
3	750809C	RMC306RVRKNPT	6.93	1.04	3.15	0.24	35	0.87	1/8	0.35	06X01.5	2.36	0.35	3.05	0.59	0.39	M8	1.26	3.31	3.15	1.18	0.71
4	750810C	RMC406RVRKNPT	7.97																4.35			
2	750811C	RMC208RVRKNPT	6.77																2.87			
3	750812C	RMC308RVRKNPT	7.99	1.22	3.94	0.31	40	0.94	1/4	0.47	R6A	2.83	0.43	3.54	0.79	0.47	M10	1.26	4.09	3.54	1.38	0.87
4	750813C	RMC408RVRKNPT	9.21																5.31			
2	750814C	RMC210RVRKNPT	6.93																3.03			
3	750815C	RMC310RVRKNPT	8.23	1.30	3.94	0.39	40	0.94	3/8	0.49	010X01.3	2.83	0.43	3.58	0.79	0.47	M10	1.26	4.33	3.54	1.38	0.98
4	750816C	RMC410RVRKNPT	9.53																5.63			

Performance Charts

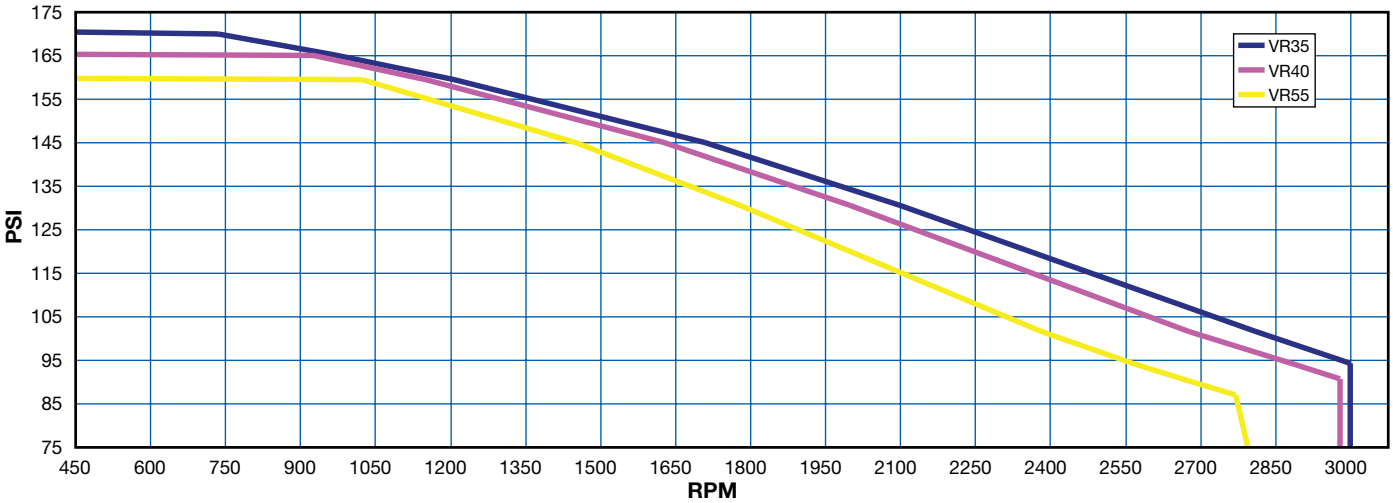

VR Seals - High Pressure Multi-Circuit Models*

GR35	GR40	GR55
MC206R VR	MC208R VR	MC212R VR
MC306R VR	MC308R VR	MC312R VR
MC406R VR	MC408R VR	MC412R VR
	MC210R VR	
	MC310R VR	
	MC410R VR	

* VR Seals are used in these high pressure multi-circuit models

Performance chart is for lubricated air, dry air, liquid and oils.

Maximum recommended speeds are found on the horizontal axis.

ROTARY UNION

1600 SERIES

TWO-PORT ROTARY UNIONS

Operating Parameters
MEDIA
Water, Air, Hydraulic Fluid
PRESSURE*
2,900 psi
TEMPERATURE*
250° F
SPEED*
1,500 RPM
THREADS
• 1/4 Inch to 1 Inch NPT • BSP & BSPP Available
MATERIAL
Nickel Plated Steel (Also available in stainless with a hardened ceramic shaft for higher speed and longer life.)
STANDARD NUMBER OF PORTS
Two Port Design

* See Performance Charts For Details

FEATURES & BENEFITS

Two Port Design

- Features two ports for use in a wide variety of applications.

Corrosion Resistant

- Nickel plated steel for corrosion resistance. Also available in all stainless steel and with a hardened ceramic shaft for higher speeds and longer life.

Medium Speed & Medium Pressure Capable

- Offers the ability to use medium speed and pressure simultaneously.

No Cross Contamination

- The 1600 Series can be used with two dissimilar fluids. All circuits are individually sealed eliminating cross contamination.

1600 Series

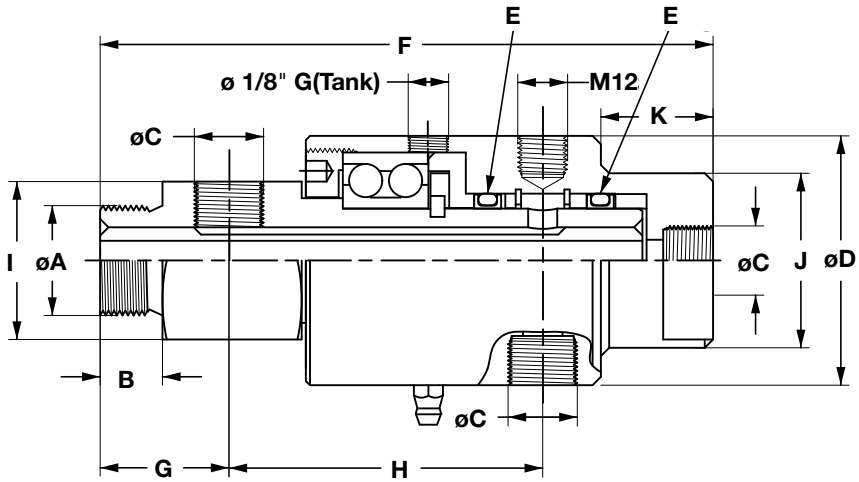

Part Numbers - 1600 Series Two-Port Rotary Unions

Nominal Pipe Size	Nickel Plated Steel				Hardened Shaft			
	Left Hand Thread		Right Hand Thread		Left Hand Thread		Right Hand Thread	
	Part Number	Description	Part Number	Description	Part Number	Description	Part Number	Description
2 x 1/4	760607C	L16191/4KNPT	760612C	R16191/4KNPT	760617C	L16191/4KCNPT	760622C	R16191/4KCNPT
2 x 3/8	760608C	L16833/8KNPT	760613C	R16833/8KNPT	760618C	L16833/8KCNPT	760623C	R16833/8KCNPT
2 x 1/2	760609C	L16441/2KNPT	760614C	R16441/2KNPT	760619C	L16441/2KCNPT	760624C	R16441/2KCNPT
2 x 3/4	760610C	L16443/4KNPT	760615C	R16443/4KNPT	760620C	L16443/4KCNPT	760625C	R16443/4KCNPT
2 x 1	760611C	L17601KNPT	760616C	R17601KNPT	760621C	L17601KCNPT	760626C	R17601KCNPT

Dimensions - 1600 Series Two-Port Rotary Unions

Nominal Pipe Size	Shaft Thread (A)	B	Inlet Thread (C)	D	E*	F	G	H	I	J	Flats on (J) Diameter	K
2 x 1/4	1/2	.50	1/4	1.96	466790C	4.05	.94	1.88	1.06	1.18	.94	.47
2 x 3/8	3/4	.59	3/8	2.36	466794C	5.62	1.22	2.83	1.49	1.65	1.49	
2 x 1/2	1	.78	1/2	3.14	466796C	7.87	1.57	3.81	2.12	1.96	1.77	.59
2 x 3/4	1		3/4			7.12						
2 x 1	1-1/2		1	3.54	466799C	9.72	2.04	5	3.54	2.36	1.96	.70

* 2 seals per joint

Performance Charts

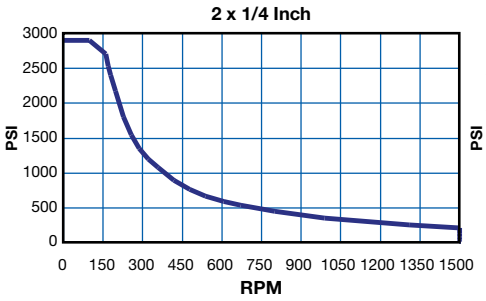

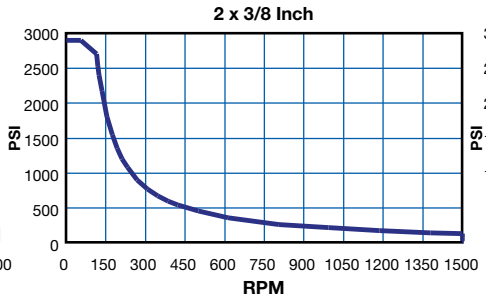

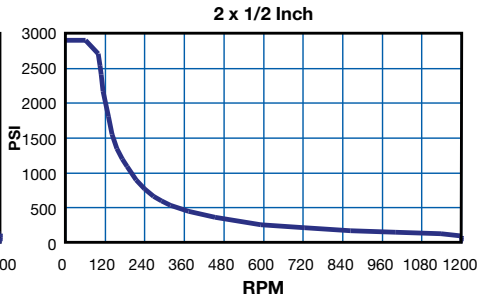

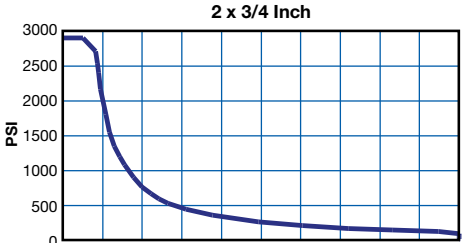

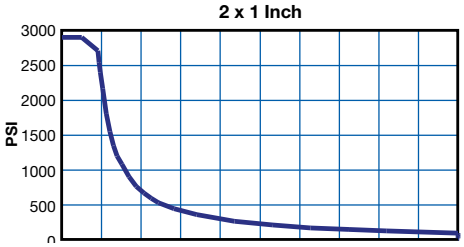

Performance charts are for oil, grease or similar lubricating media.
For media such as water or air, reduce the maximum recommended speed as follows:

For Water: Multiply speed by 0.67
For Air: Multiply speed by 0.33

Where maximum recommended speeds are found on the horizontal axis.

Standard Material

ROTARY UNION

1650 SERIES

TWO-PORT ROTARY UNIONS

Operating Parameters
MEDIA
Water, Air, Hydraulic Fluid
PRESSURE*
2,900 psi
TEMPERATURE*
250° F
SPEED*
1,500 RPM
THREADS
• 1/4 Inch to 1 Inch NPT • BSP & BSPP Available
MATERIAL
Nickel Plated Steel (Also available in stainless with a hardened ceramic shaft for higher speed and longer life.)
STANDARD NUMBER OF PORTS
Two Port Design

* See Performance Charts For Details

FEATURES & BENEFITS

Two Port Design

- Features two ports for use in a wide variety of applications.

Corrosion Resistant

- Nickel plated steel for corrosion resistance. Also available in all stainless steel and with a hardened ceramic shaft for higher speeds and longer life.

Medium Speed & Medium Pressure Capable

- Offers the ability to use medium speed and pressure simultaneously.

No Cross Contamination

- Can be used with two dissimilar fluids. All circuits are individually sealed to eliminate cross contamination.

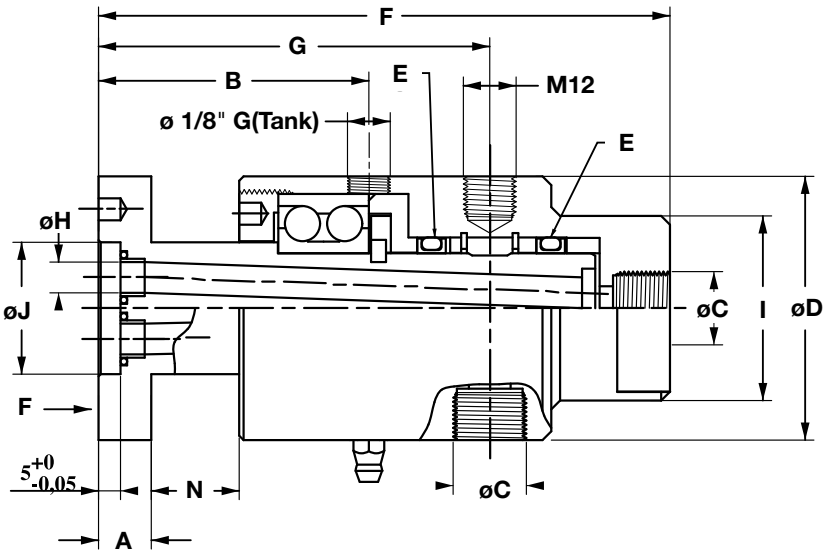

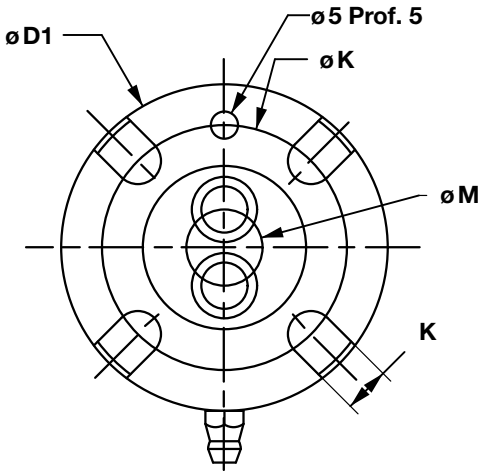

Part Numbers - 1650 Series Two-Port Rotary Unions

Nominal Pipe Size	Nickel Plated Steel				Hardened Shaft			
	Left Hand Thread		Right Hand Thread		Left Hand Thread		Right Hand Thread	
	Part Number	Description	Part Number	Description	Part Number	Description	Part Number	Description
2 x 1/4	760607C	L16191/4KNPT	760612C	R16191/4KNPT	760617C	L16191/4KCNPT	760622C	R16191/4KCNPT
2 x 3/8	760608C	L16833/8KNPT	760613C	R16833/8KNPT	760618C	L16833/8KCNPT	760623C	R16833/8KCNPT
2 x 1/2	760609C	L16441/2KNPT	760614C	R16441/2KNPT	760619C	L16441/2KCNPT	760624C	R16441/2KCNPT
2 x 3/4	760610C	L16443/4KNPT	760615C	R16443/4KNPT	760620C	L16443/4KCNPT	760625C	R16443/4KCNPT
2 x 1	760611C	L17601KNPT	760616C	R17601KNPT	760621C	L17601KCNPT	760626C	R17601KCNPT

Dimensions - 1650 Series Two-Port Rotary Unions

Nominal Pipe Size	A	B	NPT C	D	E*	F	G	H	I	Flats on (I) Diameter	J	K	L	M
1/4	.47	1.73	1/4	1.96	GR15	3.85	2.55	.11	1.18	.94	.78	1.37	.33	.39
3/8		2.42	3/8	2.36	GR25	5.11	3.50	.27	1.65	1.49	1.18	1.77		.55
1/2		2.63	1/2	3.14	GR35	5.70	3.85	.47	1.96	1.77	1.77	2.55		.82
3/4			3/4			6.49								
1	.59	3.79	1	3.54	GR50	8.26	5.51	.70	2.36	1.96	2.36	3.14	.43	1.14

* 2 seals per joint

Performance Charts

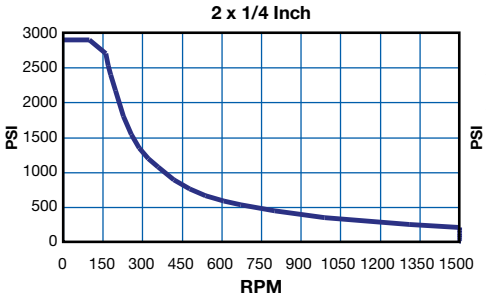

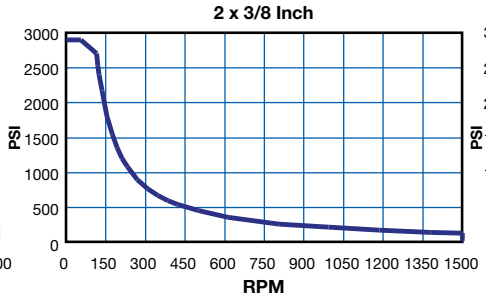

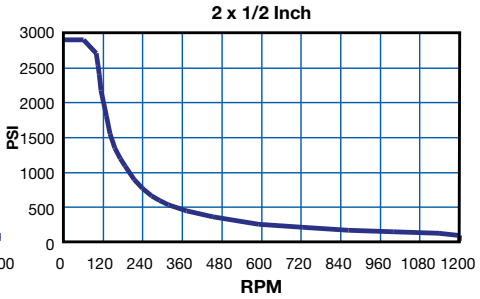

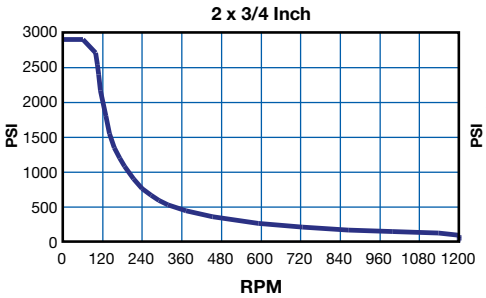

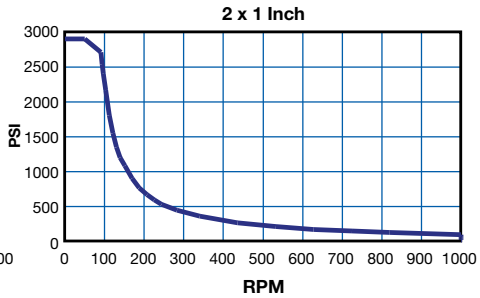

Performance charts are for oil, grease or similar lubricating media.
For media such as water or air, reduce the maximum recommended speed as follows:

For Water: Multiply speed by 0.67
For Air: Multiply speed by 0.33

Where maximum recommended speeds are found on the horizontal axis.

Standard Material

ROTARY UNION

500 SERIES

AROUND THE SHAFT

Operating Parameters
MEDIA
Water, Air, Hydraulic Fluid
PRESSURE*
5,800 psi
TEMPERATURE*
248° F
SPEED*
3,000 RPM
THREADS
1/4 Inch to 1 Inch NPT
MATERIAL
Nickel Treated Carbon Steel Construction

* See Performance Charts For Details

FEATURES & BENEFITS

Shaft Mounted Design

- Used in conjunction with the customer's shaft and retaining sleeve.

Two Configurations

- High speed, low pressure applications, or high pressure, low speed applications.

Flexible Installation

- Can be installed anywhere on the shaft, singly or in series, due to in-line design.

High Pressure, Low Speed

- High pressure, low speed models can be used at pressures to 5,800 psi and speeds less than 100 RPM.

High Speed, Low Pressure

- High speed, low pressure models can be used at speeds to 3,000 RPM, and pressures to 175 psi.

Part Numbers - 500 Series Rotary Unions

Customer Shaft Size	Nickel Plated Steel				Stainless Steel			
	High-Pressure, Low-Speed		High-Speed, Low-Pressure		High-Pressure, Low-Speed		High-Speed, Low-Pressure	
	Part Number	Description	Part Number	Description	Part Number	Description	Part Number	Description
20mm	750905C	BAT20RK	750935C	BAT20RKVR	750920C	BAT20RI	750950C	BAT20RIVR
30mm	750906C	BAT30RK	750936C	BAT30RKVR	750921C	BAT30RI	750951C	BAT30RIVR
40mm	750907C	BAT40RK	750937C	BAT40RKVR	750922C	BAT40RI	750952C	BAT40RIVR
45mm	750908C	BAT45RK	750938C	BAT45RKVR	750923C	BAT45RI	750953C	BAT45RIVR
50mm	750909C	BAT50RK	750939C	BAT50RKVR	750924C	BAT50RI	750954C	BAT50RIVR
55mm	750910C	BAT55RK	750940C	BAT55RKVR	750925C	BAT55RI	750954C	BAT55RIVR
60mm	750911C	BAT60RK	750941C	BAT60RKVR	750926C	BAT60RI	750956C	BAT60RIVR
65mm	750912C	BAT65RK	750942C	BAT65RKVR	750927C	BAT65RI	750957C	BAT65RIVR
70mm	750913C	BAT70RK	750943C	BAT70RKVR	750928C	BAT70RI	750958C	BAT70RIVR
75mm	750914C	BAT75RK	750944C	BAT75RKVR	750929C	BAT75RI	750959C	BAT75RIVR
80mm	750915C	BAT80RK	750945C	BAT80RKVR	750930C	BAT80RI	750960C	BAT80RIVR
85mm	750916C	BAT85RK	750946C	BAT85RKVR	750931C	BAT85RI	750961C	BAT85RIVR
90mm	750917C	BAT90RK	750947C	BAT90RKVR	750932C	BAT90RI	750962C	BAT90RIVR
95mm	750918C	BAT95RK	750948C	BAT95RKVR	750933C	BAT95RI	750963C	BAT95RIVR
100mm	750919C	BAT100RK	750949C	BAT100RKVR	750934C	BAT100RI	750964C	BAT100RIVR

* 2 seals per joint

High-Pressure, Low-Speed

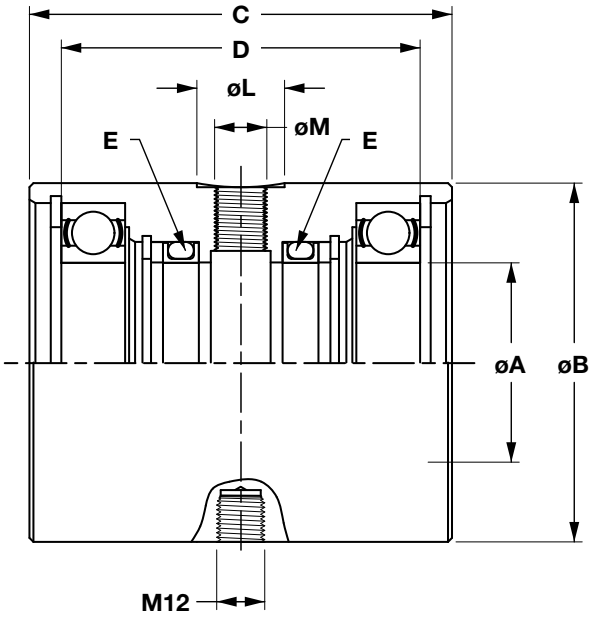

High-Speed, Low-Pressure

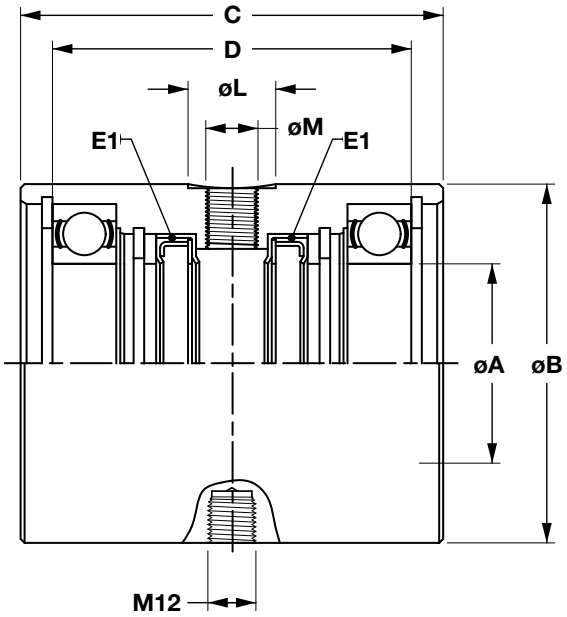

Dimensions - 500 Series Rotary Unions

Customer Shaft Size	A	B	C	D	E*	E1*	L	M
20mm	0.75	2.16	3.50	3.03	GR20	OAB20	.86	.25
30mm	1.18	2.55	3.58		GR30	OAB30		
40mm	1.57	2.95	3.93	3.38	GR40	OAB40		
45mm	1.77	3.34	4.09	3.54	GR45	OAB45		
50mm	1.96	3.54	4.17		GR50	OAB50		
55mm	2.16	3.93	4.68	4.05	GR55	OAB55	1.25	.50
60mm	2.36	4.13	4.76	4.13	GR60	OAB60		
65mm	2.55	4.33	4.84	4.21	GR65	OAB65		
70mm	2.75	4.72	5.00		GR70	OAB70		
75mm	2.95	4.92	5.27	4.48	GR75	OAB75		
80mm	3.14	5.31	5.43	4.64	GR80	OAB80		
85mm	3.34	5.51	5.51	4.72	GR85	OAB85		
90mm	3.54	5.90	5.59	4.80	GR90	OAB90		
95mm	3.74	6.10	5.78	5.00	GR95	OAB95		
100mm	3.93	6.29	6.02	5.07	GR100	OAB100		

* 2 seals per joint

Performance Charts

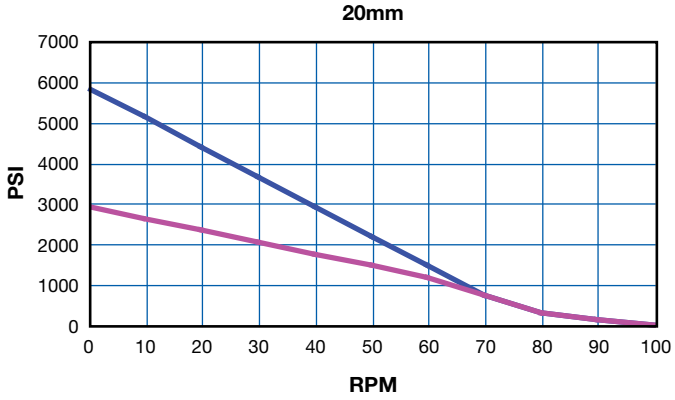

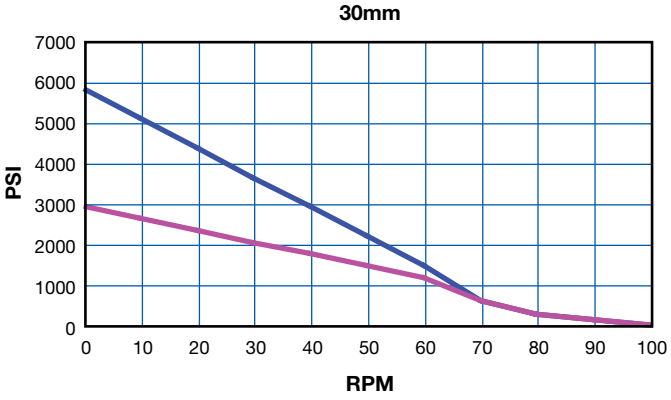

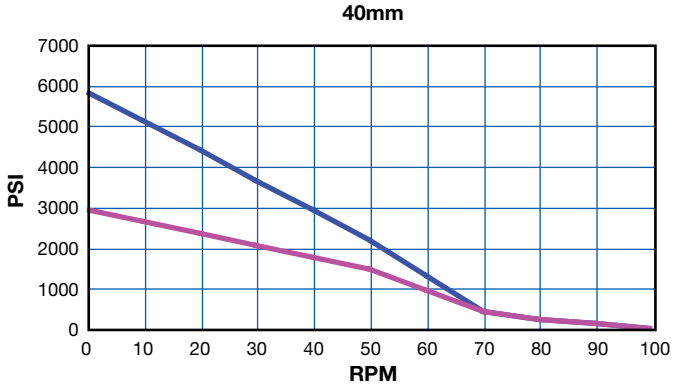

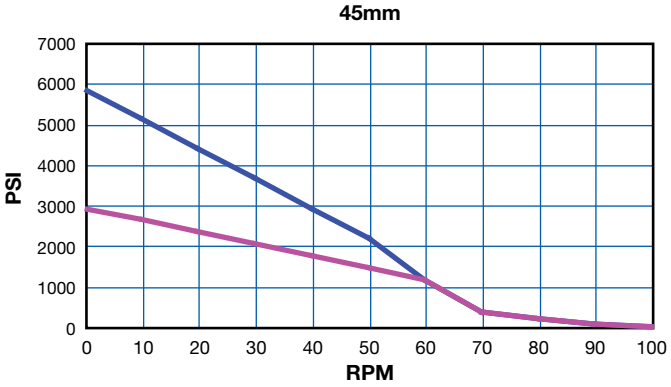

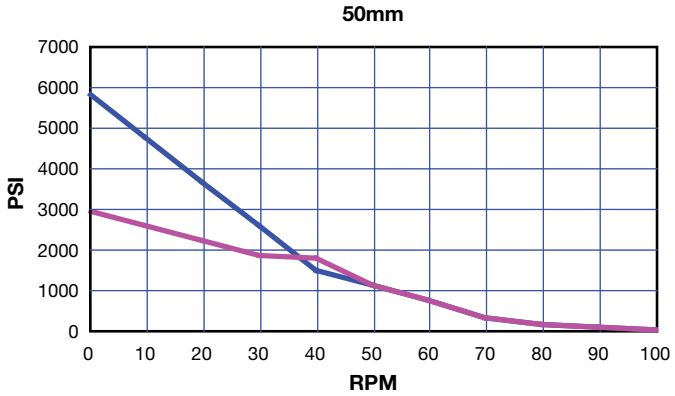

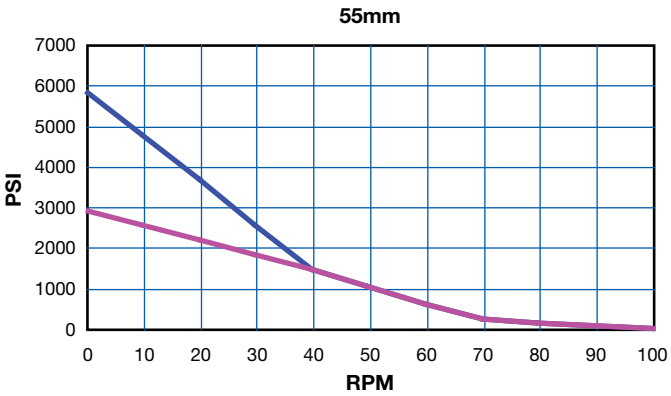

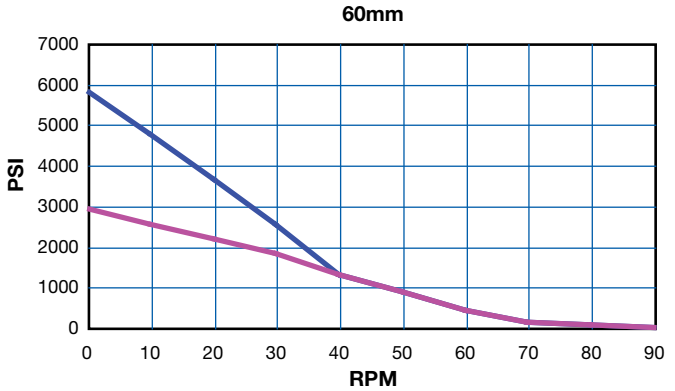

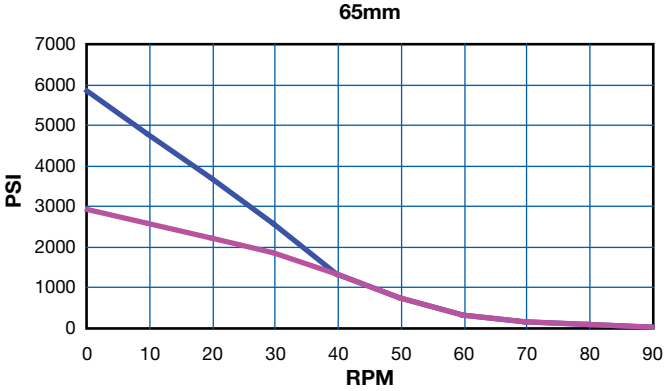

Performance Charts

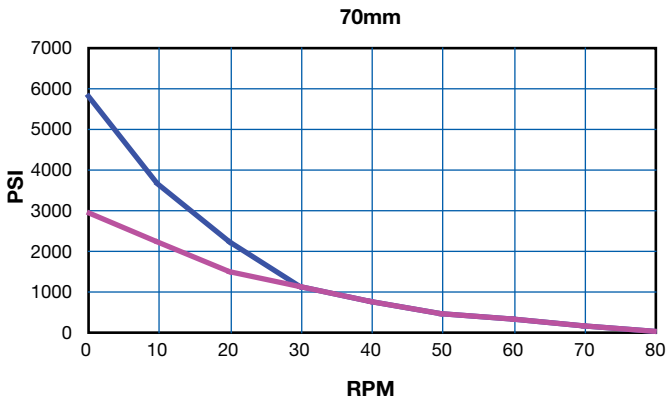

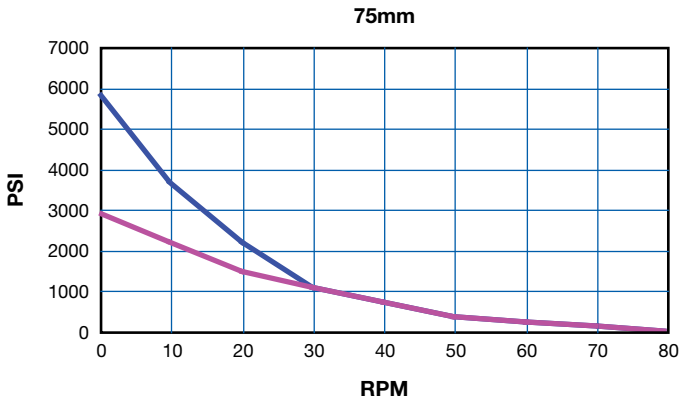

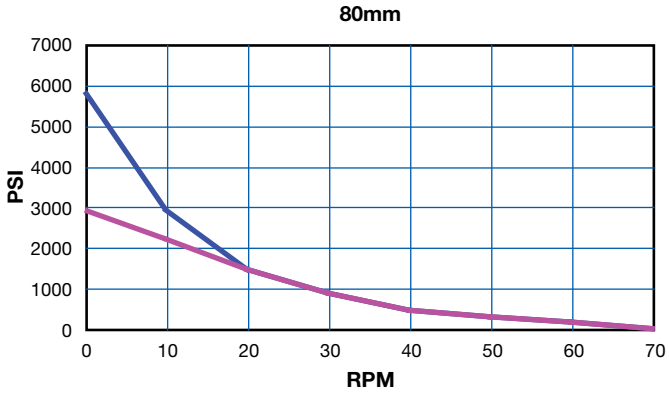

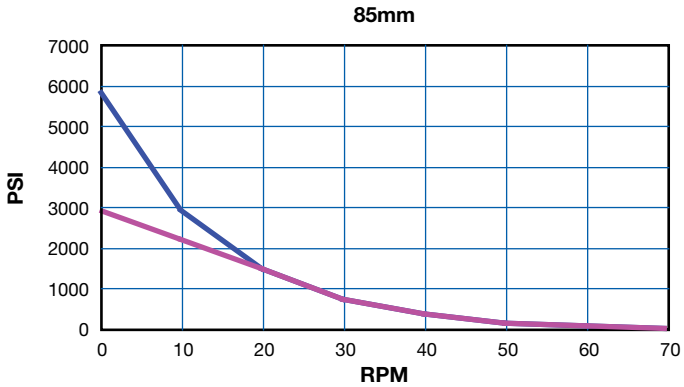

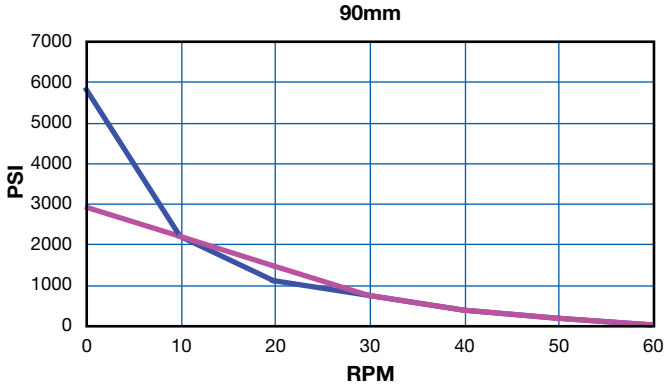

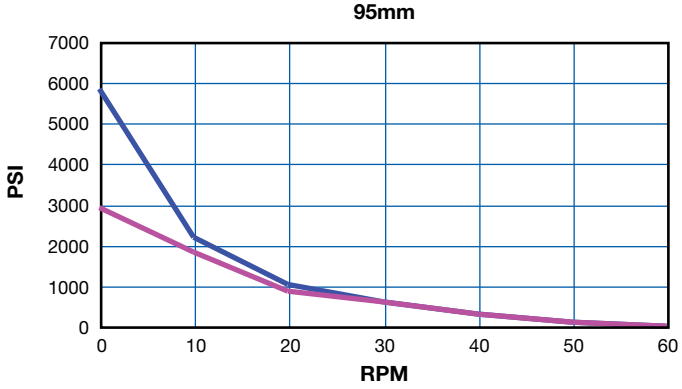

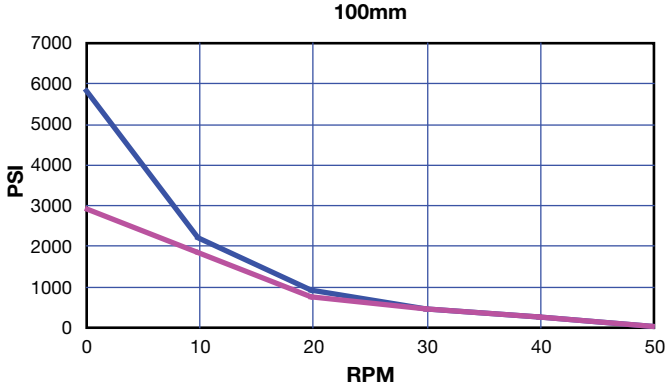

Standard Material

Stainless Steel

Performance Charts

20mm

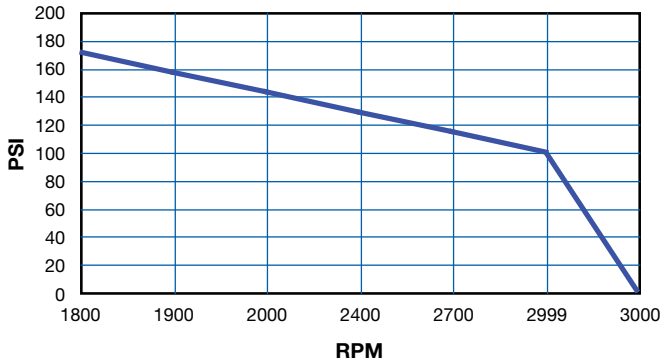

30mm

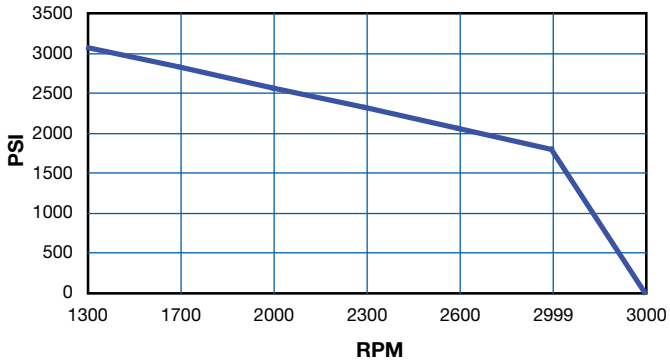

40mm

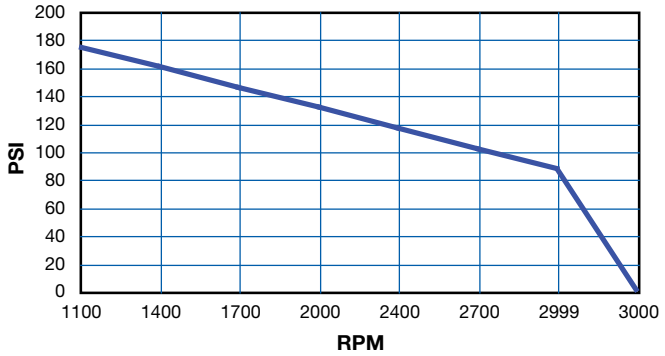

45mm

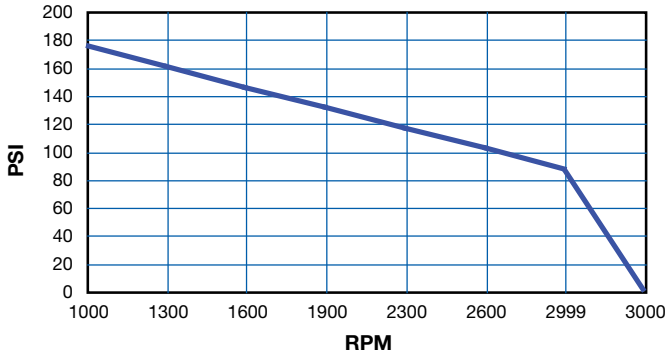

50mm

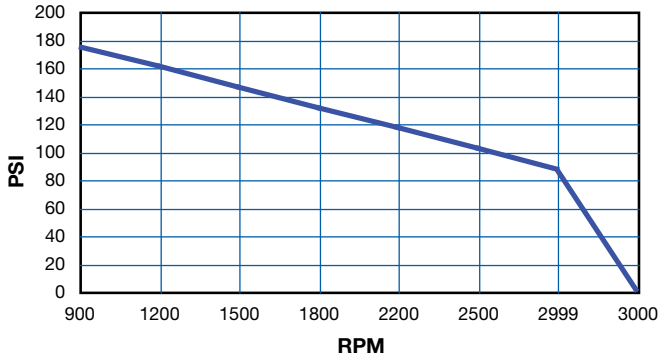

55mm

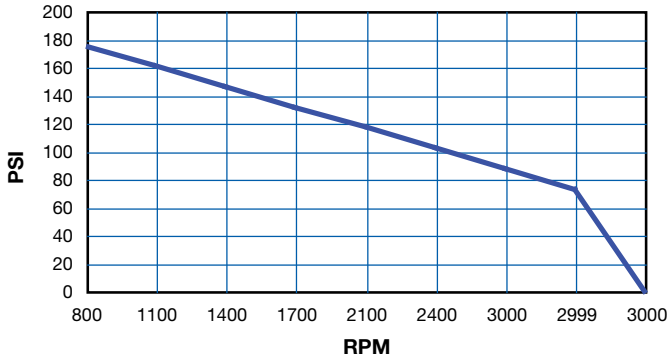

60mm

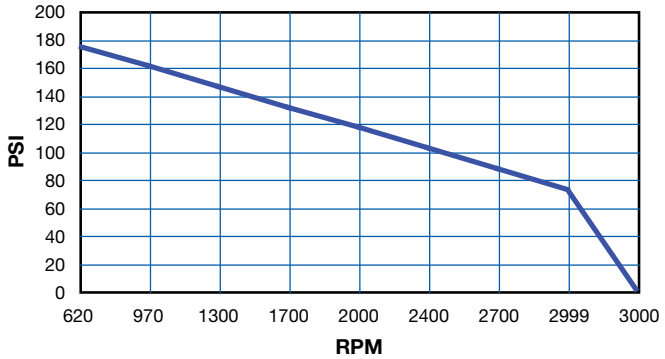

65mm

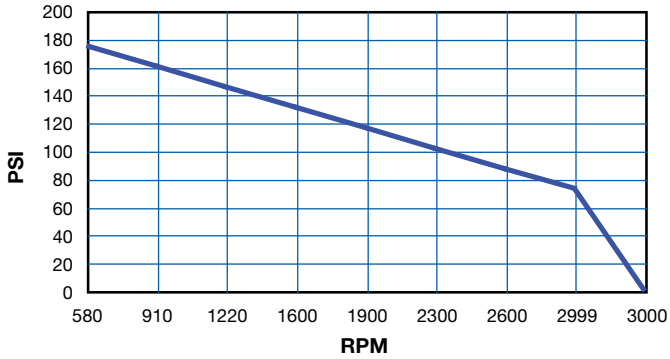

Performance Charts

70mm

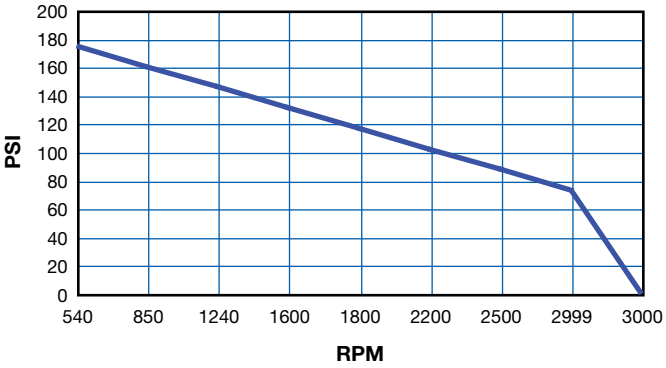

75mm

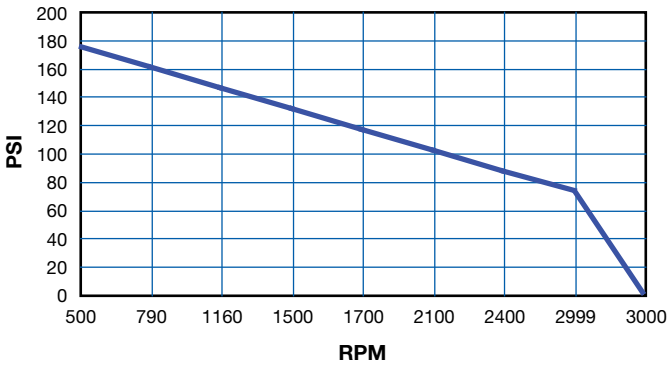

80mm

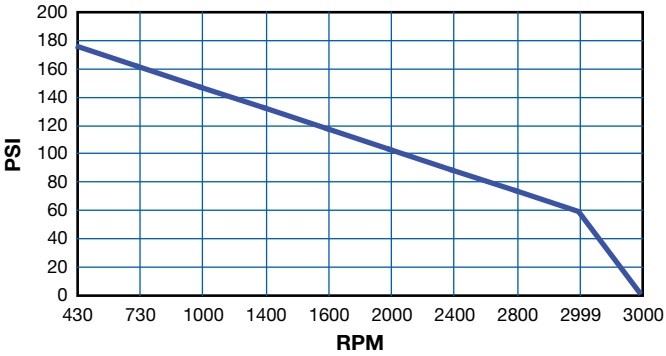

85mm

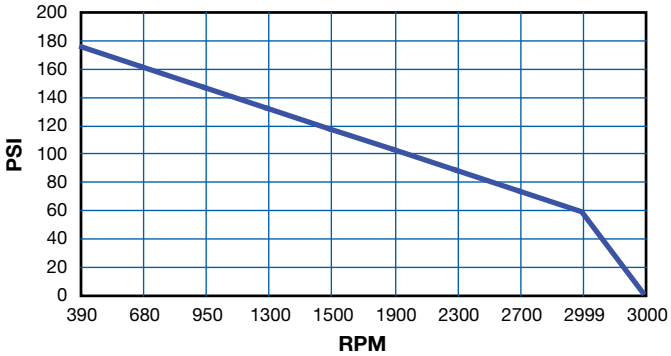

90mm

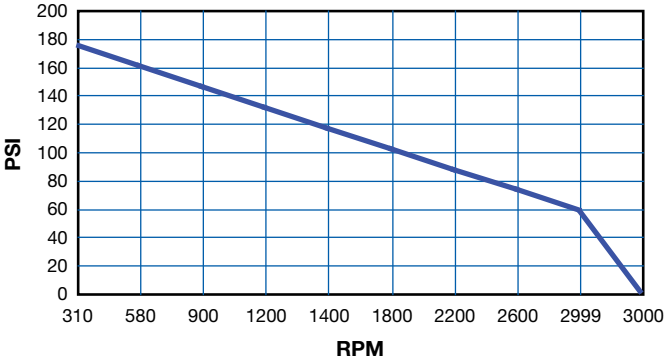

95mm

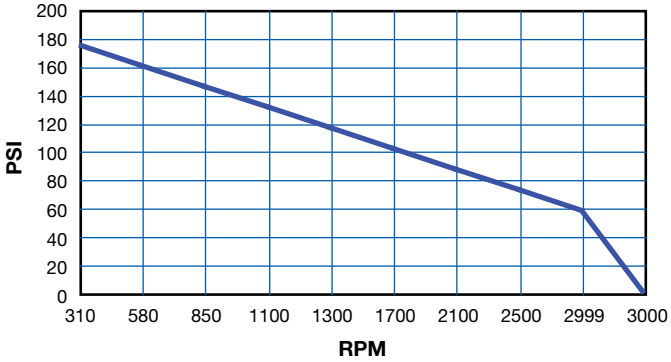

100mm

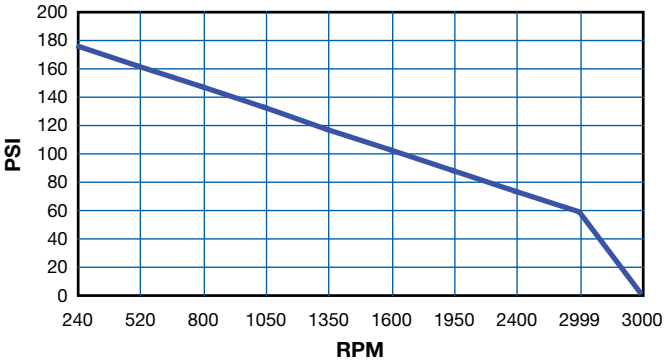

ROTARY UNION

1100 SERIES

SLOW ROTATION SWIVEL

Operating Parameters
MEDIA
Water, Air, Hydraulic Fluid
PRESSURE*
725 psi
TEMPERATURE*
392° F
SPEED*
60 RPM
THREADS
• 1/4 Inch to 3 Inch NPT • BSP Available
MATERIAL
Nickel Plated Steel (Also available in all Stainless Steel)

* See Performance Charts For Details

FEATURES & BENEFITS

Bi-Directional Swivel

- 1100 Series swivels are for applications where complete rotation is not necessary.

Designed For Slow Rotation

- Designed for swiveling or slow rotation applications.

Superior Sealing Performance

- The 1100 series has the GR seal for superior sealing performance.

Multiple Configurations

- Available with axial (straight through) flow, or radial flow with the addition of a 90° stainless steel elbow.

Corrosion Resistant

- Features nickel plated carbon steel construction. Stainless steel models are also available.

Part Numbers - 1100 Series Swivels

Nominal Pipe Size	Shaft Thread (A)	Axial Flow				with Stainless Steel Elbow			
		Nickel Plated Steel		Stainless Steel		Nickel Plated Steel		Stainless Steel	
		Part Number	Description	Part Number	Description	Part Number	Description	Part Number	Description
1/4	1/4	750839C	R1013KNPT	760628C	R1013INPT	760934	R1013KENPT	760944	R1013IENPT
3/8	3/8	750840C	R1017KNPT	750850C	R1017INPT	760935	R1017KENPT	760945	R1017IENPT
1/2	1/2	750841C	R1021KNPT	750851C	R1021INPT	760936	R1021KENPT	760946	R1021IENPT
3/4	3/4	750842C	R1027KNPT	750852C	R1027INPT	760937	R1027KENPT	760947	R1027IENPT
1	1	750843C	R1034KNPT	750853C	R1034INPT	760938	R1034KENPT	760948	R1034IENPT
1-1/4	1-1/4	750844C	R1042KNPT	750854C	R1042INPT	760939	R1042KENPT	760949	R1042IENPT
1-1/2	1-1/2	750845C	R1049KNPT	750855C	R1049INPT	760940	R1049KENPT	760950	R1049IENPT
2	2	750846C	R1060KNPT	750856C	R1060INPT	760941	R1060KENPT	760951	R1060IENPT
2-1/2	2-1/2	750847C	R1076KNPT	750857C	R1076INPT	760942	R1076KENPT	760952	R1076IENPT
3	3	750848C	R1090KNPT	750858C	R1090INPT	760943	R1090KENPT	760953	R1090IENPT

Maximum Operating Pressure (psi)

Nominal Pipe Size	Nickel Plated Steel	Stainless Steel
1/4	725	290
3/8		
1/2		
3/4		
1	435	218
1-1/4		
1-1/2		
2	290	145
2-1/2		
3		

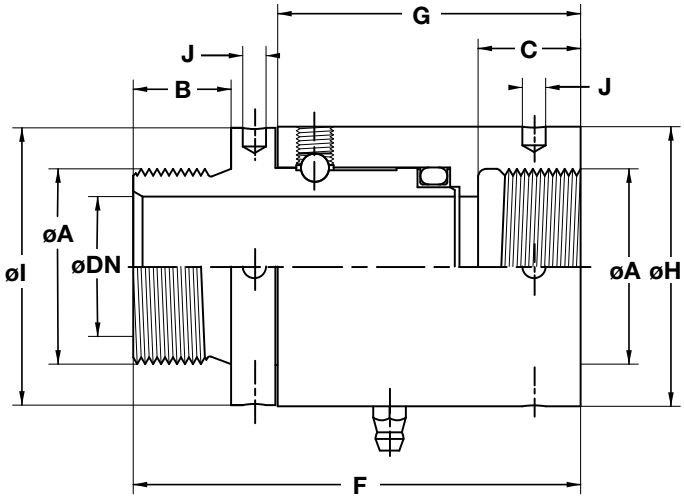

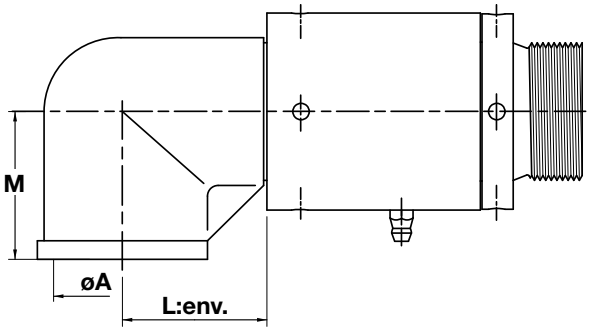

Dimensions - 1100 Series Swivel (Inch)

Nominal Pipe Size	Shaft Thread (A)	B	C	DN	Overall Length (F)	G	Overall Diameter (H)	I	J	L	M
1/4	1/4	.39	.43	.27	1.87	1.22	.98	.74		.78	.78
3/8	3/8	.43	.47	.39	2.06	1.37	1.25	1.02	.19	1.10	.94
1/2	1/2	.55	.59	.43	2.30	1.49	1.25	1.02		1.18	1.10
3/4	3/4	.62	.66	.70	2.97	2.00	1.77	1.49		1.25	1.25
1	1	.74	.78	.98	3.42	2.36	2.04	2.04	.23	1.53	1.49
1-1/4	1-1/4	.82	.86	1.18	3.77	2.55	2.36	2.36		1.73	1.77
1-1/2	1-1/2			1.49	3.85	2.63	2.55	2.55		2.00	1.96
2	2	.98	1.02	1.88	4.48	3.07	3.14	3.14		2.36	2.28
2-1/2	2-1/2	1.10	.90	2.36	4.46	2.95	3.74	3.74	.27	2.95	2.75
3	3	1.18	1.02	2.95	4.78	3.18	4.17	4.17		3.42	3.07

1100 SERIES

SLOW ROTATION SWIVEL

Performance Charts

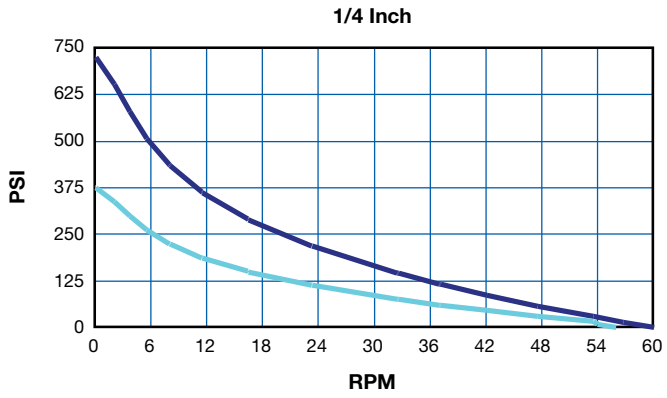

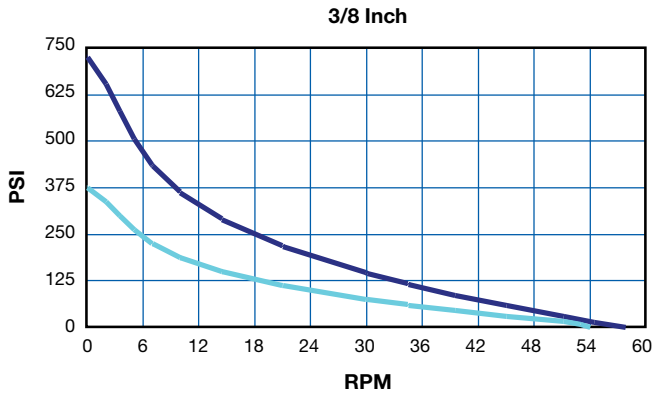

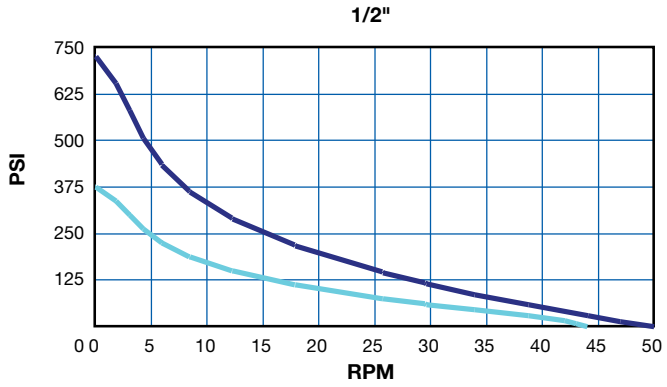

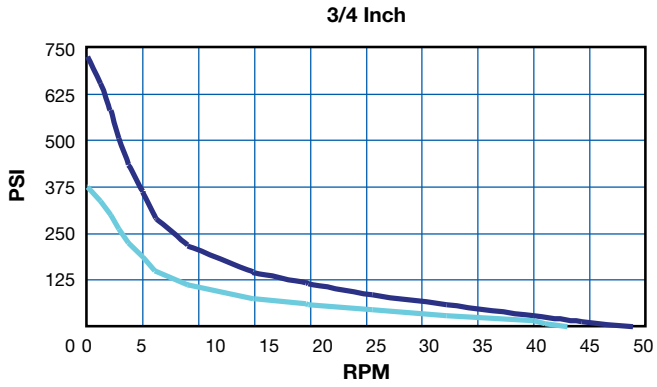

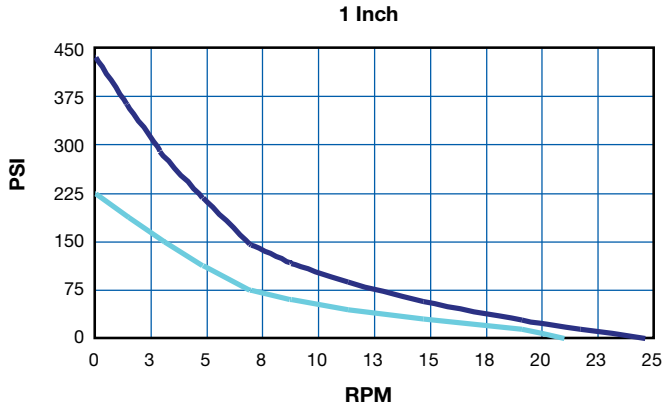

Standard Material

Stainless Steel

Performance Charts

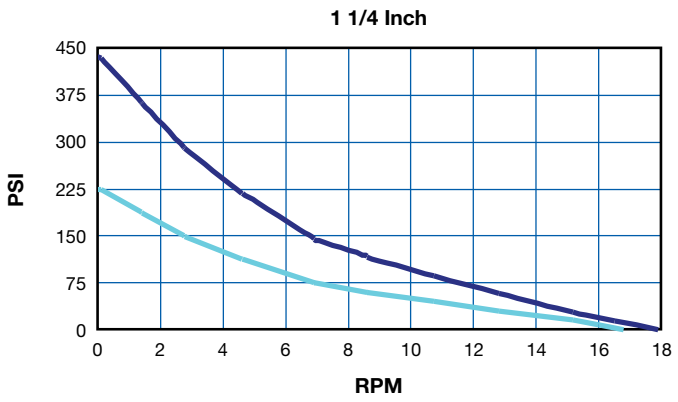

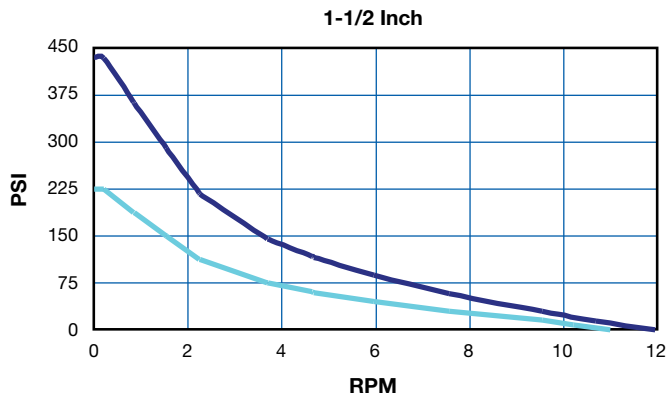

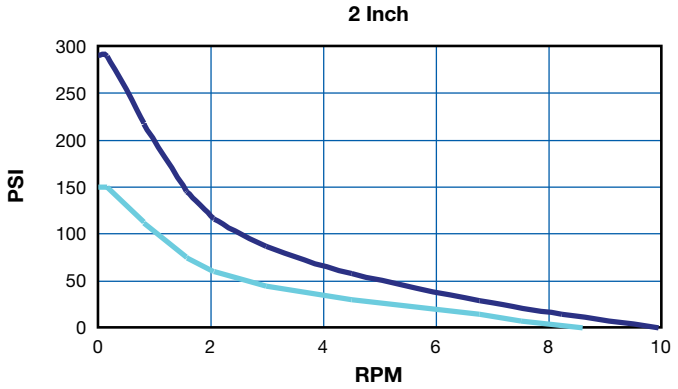

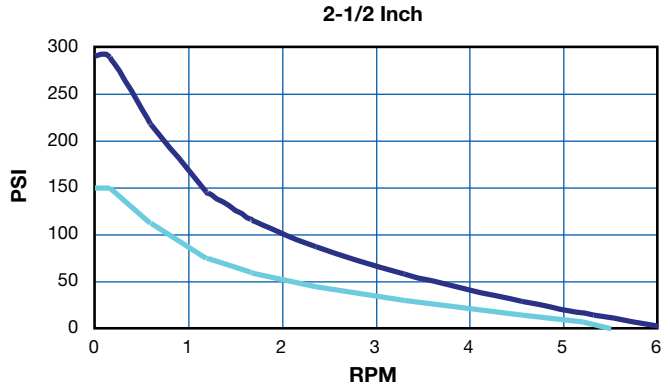

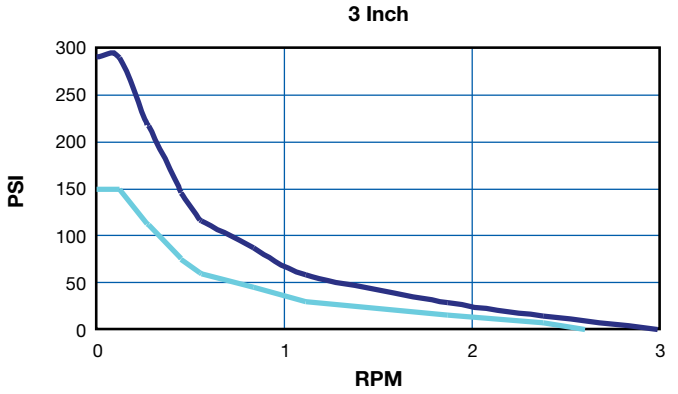

Standard Material

Stainless Steel

ROTARY UNION

1102 SERIES

SLOW ROTATION SWIVEL

Operating Parameters
MEDIA
Water, Air, Hydraulic Fluid
PRESSURE*
1,160 psi
TEMPERATURE*
392° F
SPEED*
90 RPM
THREADS
• 1/4 Inch to 6 Inch NPT • BSP Available
MATERIAL
Nickel Plated Steel (Also available in all Stainless Steel)

* See Performance Charts For Details

FEATURES & BENEFITS

Bi-Directional Swivel

- 1102 Series swivels are for applications where complete rotation is not necessary.

Slow Rotation Applications

- Designed for swiveling or slow rotation applications.

High Pressure

- The 1102 will operate at pressures up to 1,160 psi.

Superior Sealing Performance

- The 1102 series has the GR Seal for superior sealing performance.

Multiple Configurations

- Available with axial (straight through) flow, or radial flow with the addition of a 90° stainless steel elbow.

Corrosion Resistant

- Features nickel plated carbon steel construction. Stainless steel models are also available.

Stability At Higher Speeds & Pressures

- The 1102 Series offers two ball races which allow for increased pressure and speed.

Part Numbers - 1102 Series Swivels

Nominal Pipe Size	Shaft Thread (A)	Axial Flow				with Stainless Steel Elbow			
		Nickel Plated Steel		Stainless Steel		Nickel Plated Steel		Stainless Steel	
		Part Number	Description	Part Number	Description	Part Number	Description	Part Number	Description
1/4	1/4	750859C	R1013K2NPT	750872C	R1013I2NPT	760980C	R1013K2ENPT	760993C	R1013I2ENPT
3/8	3/8	750860C	R1017K2NPT	750873C	R1017I2NPT	760981C	R1017K2ENPT	760994C	R1017I2ENPT
1/2	1/2	750861C	R1021K2NPT	750874C	R1021I2NPT	760982C	R1021K2ENPT	760995C	R1021I2ENPT
3/4	3/4	750862C	R1027K2NPT	750875C	R1027I2NPT	760983C	R1027K2ENPT	760996C	R1027I2ENPT
1	1	750863C	R1034K2NPT	750876C	R1034I2NPT	760984C	R1034K2ENPT	760997C	R1034I2ENPT
1-1/4	1-1/4	750864C	R1042K2NPT	750877C	R1042I2NPT	760985C	R1042K2ENPT	760998C	R1042I2ENPT
1-1/2	1-1/2	750865C	R1049K2NPT	750878C	R1049I2NPT	760986C	R1049K2ENPT	760999C	R1049I2ENPT
2	2	750866C	R1060K2NPT	750879C	R1060I2NPT	760987C	R1060K2ENPT	770000C	R1060I2ENPT
2-1/2	2-1/2	750867C	R1076K2NPT	750880C	R1076I2NPT	760988C	R1076K2ENPT	770001C	R1076I2ENPT
3	3	750868C	R1090K2NPT	750881C	R1090I2NPT	760989C	R1090K2ENPT	770002C	R1090I2ENPT
4	4	750869C	R10114K2NPT	750882C	R10114I2NPT	—	—	—	—
5	5	750870C	R10140K2NPT	750883C	R10140I2NPT				
6	6	750871C	R10165K2NPT	750884C	R10165I2NPT				

Maximum Operating Pressure (psi)

Nominal Pipe Size	Nickel Plated Steel	Stainless Steel
1/4	1160	435
3/8		
1/2		
3/4	870	360
1		
1-1/4	580	290
1-1/2		
2	435	215
2-1/2		
3		
4	290	145
5		
6	215	115

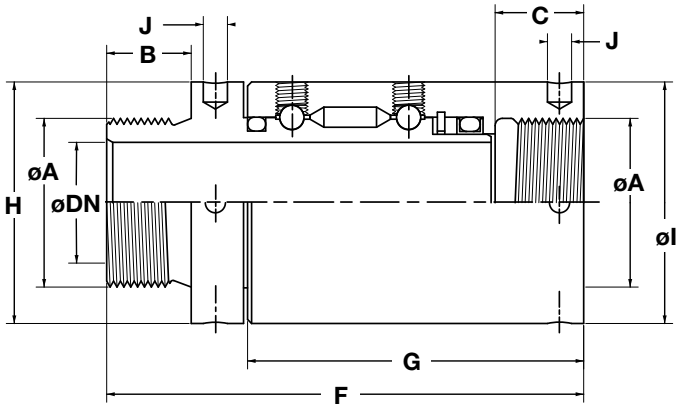

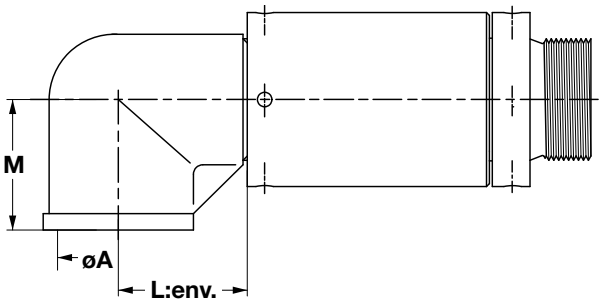

Dimensions - 1102 Series Swivel (Inch)

Nominal Pipe Size	Shaft Thread (A)	B	C	DN	F	G	H	I	J	L	M
1/4	1/4	.39	.43	.27	2.48	1.77	.74 (Flats)	.98	.19	.78	.78
3/8	3/8	.43	.47	.39	2.83	2.00	1.02 (Flats)	1.25		1.10	.94
1/2	1/2	.55	.59	.43	3.07	2.12	1.02 (Flats)	1.25		1.18	1.10
3/4	3/4	.62	.66	.70	3.77	2.65	1.49 (Flats)	1.77	.23	1.25	1.25
1	1	.74	.78	.98	4.21	2.97	2.04	2.04		1.53	1.49
1-1/4	1-1/4	.82	.86	1.18	4.64	3.28	2.36	2.36		1.73	1.77
1-1/2	1-1/2	.82	.86	1.49	5.15	3.79	2.55	2.55		2.00	1.96
2	2	.98	1.02	1.88	5.90	4.38	3.14	3.14	.27	2.36	2.28
2-1/2	2-1/2	1.10	1.18	2.36	6.73	5.03	3.74	3.74		2.95	2.75
3	3	1.18	1.25	2.95	7.28	5.51	4.17	4.17		3.42	3.07
4	4	1.37	1.57	3.93	8.00	6.18	4.53	5.43		—	—
5	5			4.72			6.69	6.69			
6	6			5.90			7.87	7.87			

Performance Charts

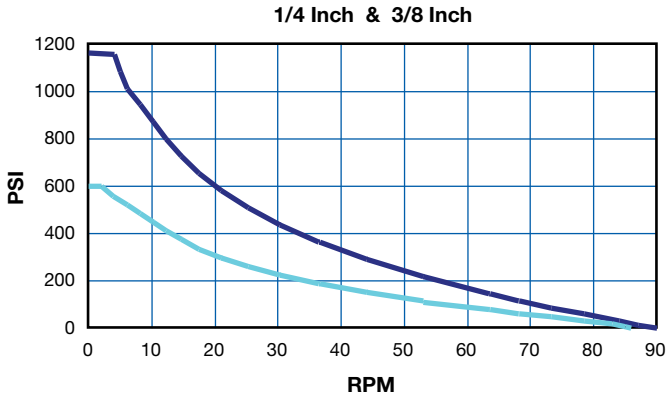

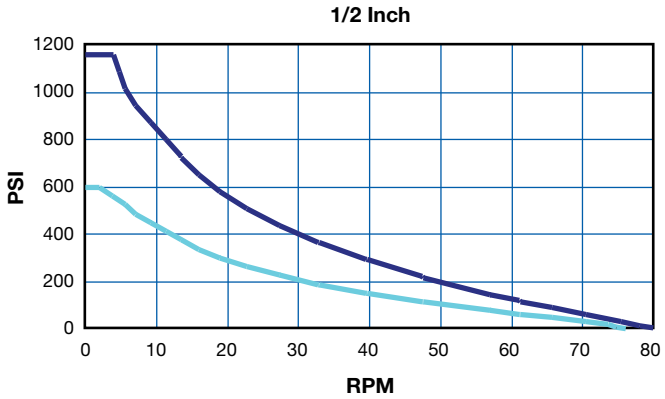

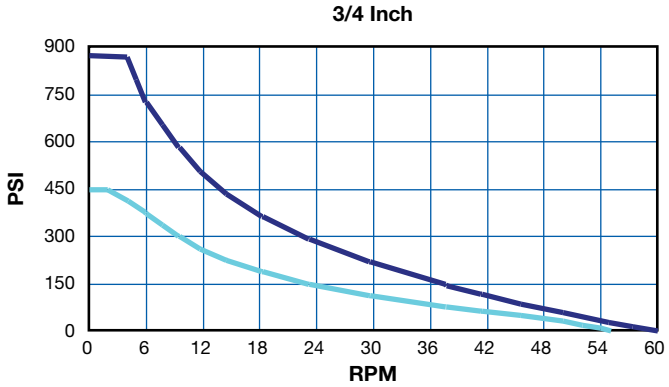

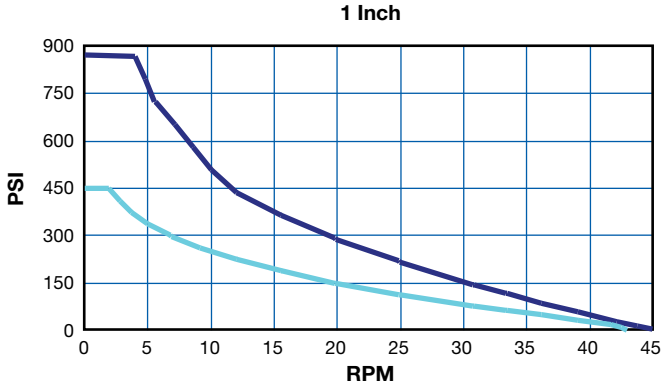

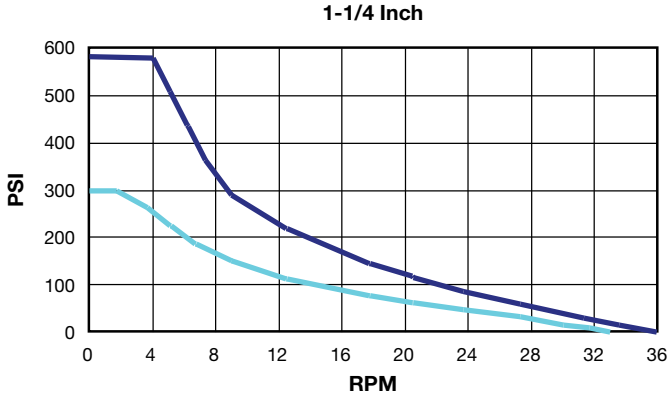

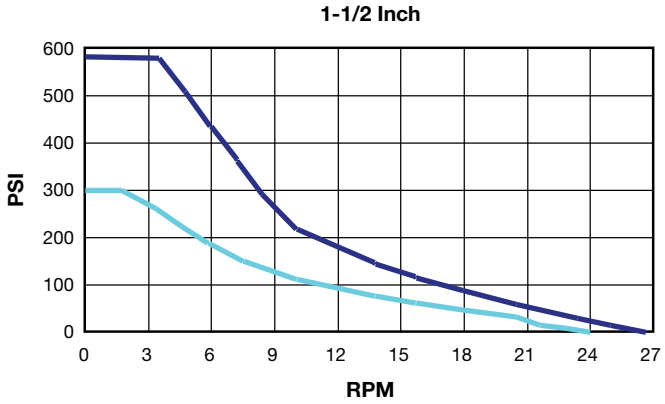

Standard Material

Stainless Steel

Performance Charts

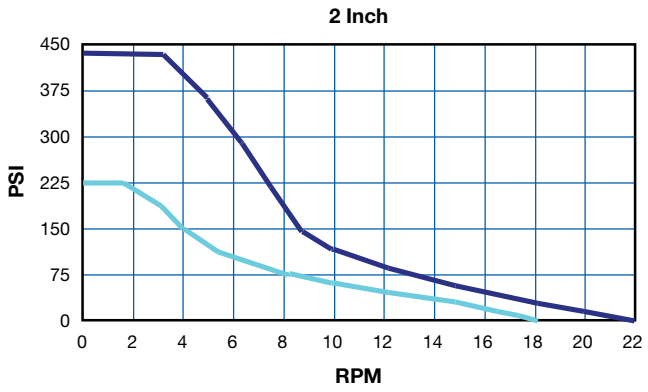

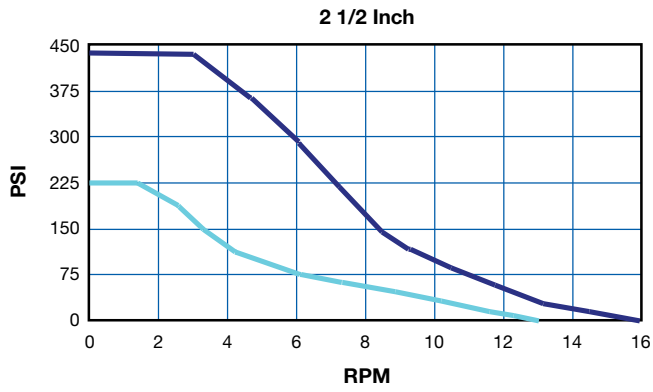

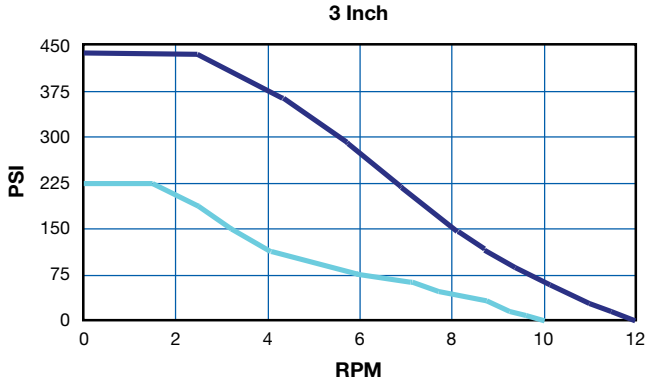

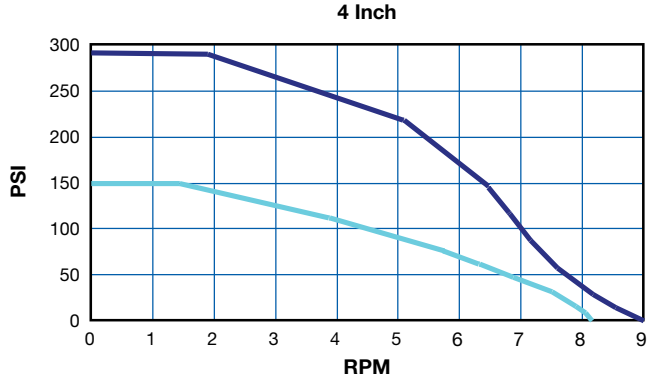

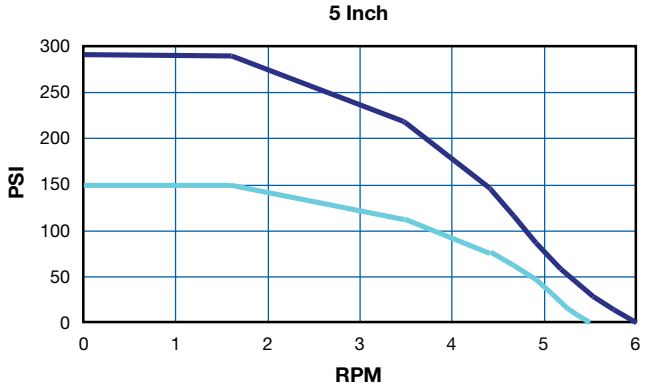

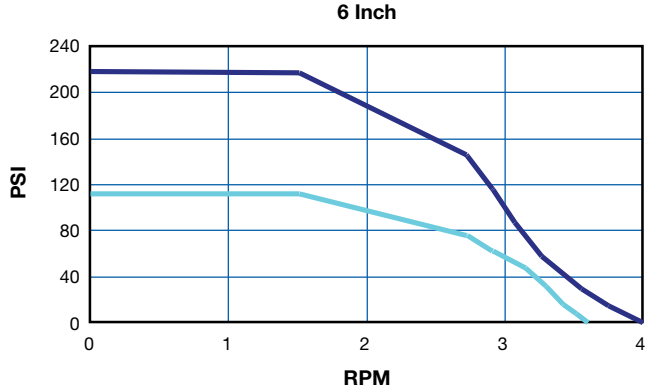

Standard Material

Stainless Steel

ROTARY UNION

1200 SERIES

SMALL ENVELOPE SWIVEL

Operating Parameters
MEDIA
Water, Air, Hydraulic Fluid
PRESSURE
5,075 psi
TEMPERATURE
392° F
SPEED
Swivel
THREADS
• 1/4 Inch to 2 Inch NPT • Other Threads Available
MATERIAL
Nickel Plated Steel

FEATURES & BENEFITS

Small Profile

- Perfect for small envelope dimensions.

Bi-Directional Swivel

- Slow or swiveling rotation.

Hydraulic Applications

- Suitable for hydraulic service.

No Lubrication

- PTFE seals require no lubrication.

Easy Installation

- Precision made wrench flats on center shaft for easy installation. Custom designs available.

Corrosion Resistant

- The 1200 Series is nickel plated as standard. Also available in stainless steel.

Thread Connections

- NPT standard. SAE, JIC, DIN or ISO threads are available upon request.

Part Numbers - 1200 Series Swivels

Nominal Pipe Size	Nickel Plated Steel				Stainless Steel			
	Right Hand Thread		Left Hand Thread		Right Hand Thread		Left Hand Thread	
	Part Number	Description	Part Number	Description	Part Number	Description	Part Number	Description
1/4	750981C	R1213SR2KNPT	760645C	L1213SR2KNPT	750988C	R1213SR2INPT	760653C	L1213SR2INPT
3/8	750982C	R1217SR2KNPT	760646C	L1217SR2KNPT	750989C	R1217SR2INPT	760654C	L1217SR2INPT
1/2	750983C	R1221SR2KNPT	760647C	L1221SR2KNPT	750990C	R1221SR2INPT	760655C	L1221SR2INPT
3/4	750984C	R1227SR2KNPT	760648C	L1227SR2KNPT	750991C	R1227SR2INPT	760656C	L1227SR2INPT
1	750985C	R1234SR2KNPT	760649C	L1234SR2KNPT	750992C	R1234SR2INPT	760657C	L1234SR2INPT
1-1/4	750986C	R1242SR2KNPT	760650C	L1242SR2KNPT	750993C	R1242SR2INPT	760658C	L1242SR2INPT
1-1/2	750987C	R1249SR2KNPT	760651C	L1249SR2KNPT	750994C	R1249SR2INPT	760659C	L1249SR2INPT

Maximum Operating Pressure (psi)

Nominal Pipe Size	Nickel Plated Steel	Stainless Steel
1/4	5,075	2,530
3/8		
1/2	4,350	2,175
3/4		
1	3,625	1,810
1-1/4		
1-1/2	2,900	1,450
2		

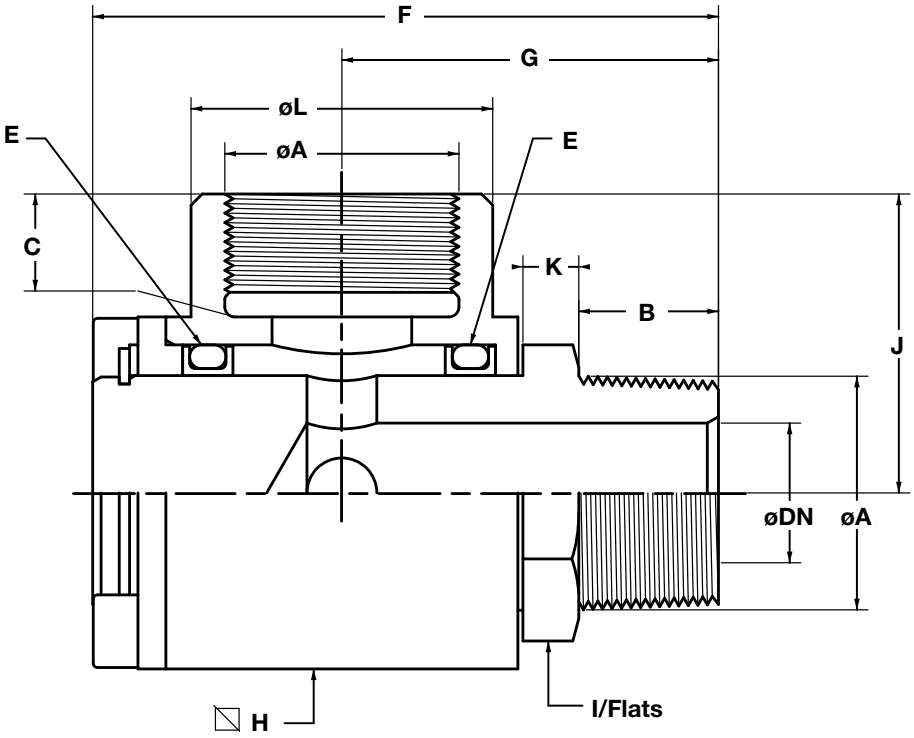

Dimensions - 1200 Series Swivel (Inch)

Nominal Pipe Size	Shaft Thread (A)	B	C	DN	E*	F	G	H	I (Flats)	J	K	L
1/4	1/4	.55	.47	.27	GR817SR	2.24	1.33	1.10	.82	1.02	.23	1.02
3/8	3/8	.59	.55	.39	GR821SR	2.50	1.53	1.25	.90	1.18	.29	1.18
1/2	1/2	.70	.59	.51	GR827SR	3.07	1.81	1.57	1.18	1.37	.31	1.49
3/4	3/4	.86	.78	.70	GR834SR	3.60	2.18	1.96	1.65	1.77	.33	1.77
1	1	.98	.86	.94	GR849SR	4.40	2.63	2.48	1.81	2.10	.39	2.15
1-1/4	1-1/4	1.18	1.22	1.18	GR849SR	5.39	3.12	3.11	2.12	2.63	.37	2.75
1-1/2	1-1/2	1.18	1.18	1.49	GR860SR	6.25	3.62	3.77	2.75	3.03	.47	3.74

* 2 seals per joint

ROTARY UNION

1300 SERIES

FLANGED SWIVEL

Operating Parameters
MEDIA
Water, Air
PRESSURE
290 psi
TEMPERATURE
392° F
SPEED
Swivel
CONNECTION TYPE
2 Inch to 12 Inch Flange
MATERIAL
Nickel Plated Steel

*See Performance Charts for Details

FEATURES & BENEFITS

Swivel Applications

Used in applications where slow rotation or swiveling motion is needed.

GR Seal Technology

Design features include a ball bearing for rotation, and a GR seal for superior sealing performance.

Flanged Swivel Design

Allows for stability in high flow applications.

High Temperature Applications

Can be used in applications with temperatures up to 392° F.

Part Numbers - 1300 Series Flanged Swivel

Nominal Pipe Size	Nickel Plated Steel		Stainless Steel	
	Part Number	Description	Part Number	Description
2	760572C	BR50K	790101C	BR50I
2-1/2	760573C	BR66K	790102C	BR66I
3	760574C	BR80K	790103C	BR80I
4	760575C	BR100K	760343C	BR100I
5	760576C	BR125K	790104C	BR125I
6	760577C	BR150K	760344C	BR150I
8	760579C	BR200K	760345C	BR200I
10	760580C	BR250K	780644C	BR250I
12	760581C	BR300K	790105C	BR300I

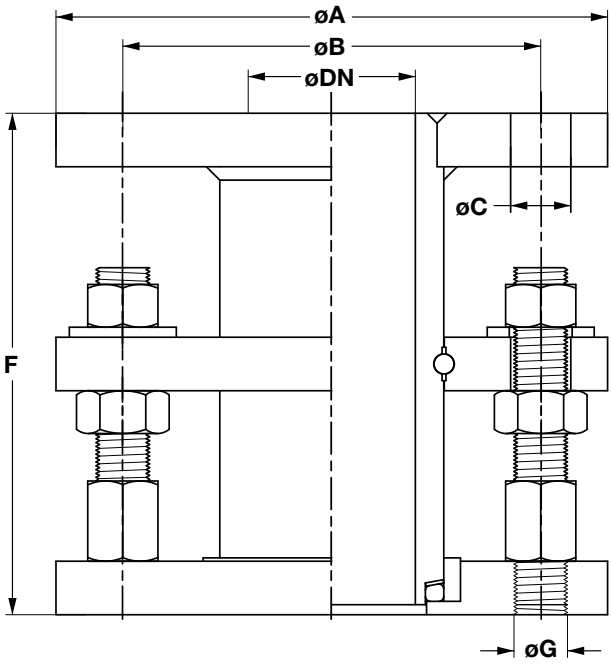

Dimensions - 1300 Series Flanged Swivel (in.)

Nominal Pipe Size	No. of Holes	Overall Dia. (A)	B	Slot C	DN	Overall Length (F)	Thread (G)
2	4	6.49	4.92	.70	2	5.90	4 x .70
2-1/2		7.28	5.70		2-1/2		
3	8	7.87	6.29		3		4 x .70 4 x M16
4		8.66	7.08		4		8 x .70
5		9.84	8.26		5		
6		11.22	9.44	.86	6		8 x .86
8		13.38	11.60		8	7.87	
10	12	15.55	13.77		10		12 x .86
12		17.50	15.70		12		

Performance Charts

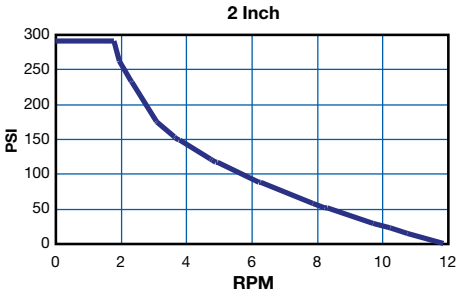

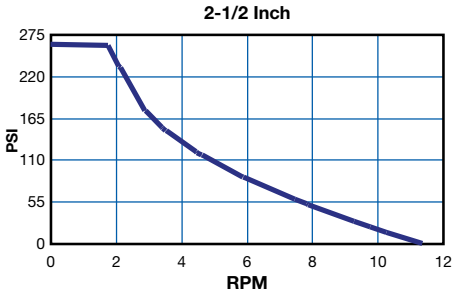

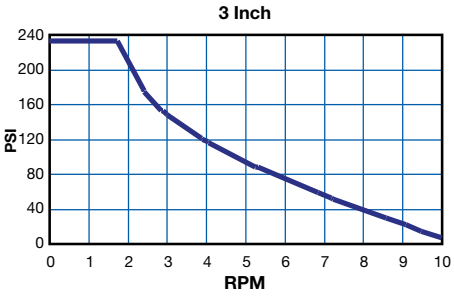

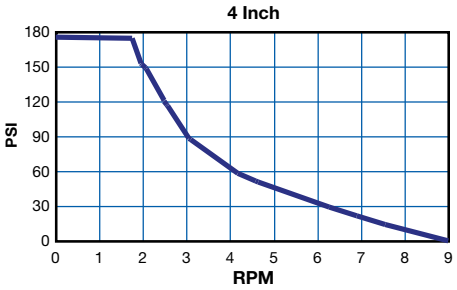

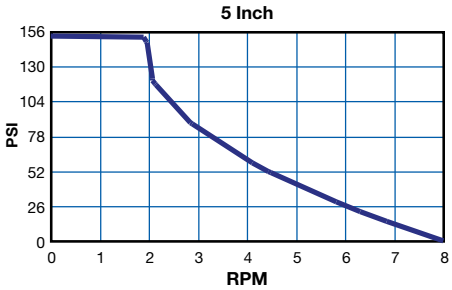

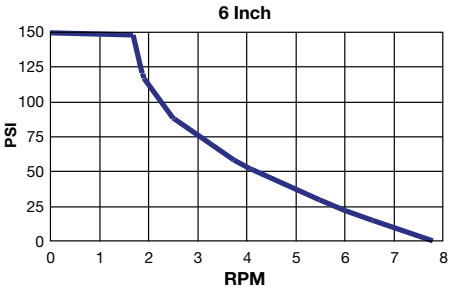

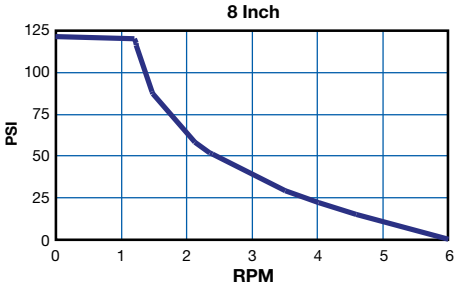

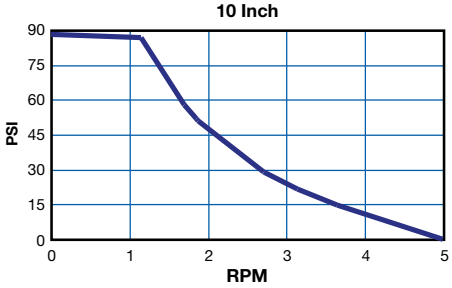

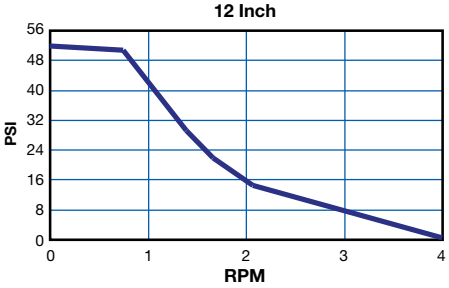

ROTARY UNION

1700 SERIES

HIGH PRESSURE SWIVEL

Operating Parameters

MEDIA
Water, Air, Hydraulic Fluid
PRESSURE*
5,075 psi
TEMPERATURE*
248° F
SPEED*
80 RPM
THREADS
• 1/4 Inch to 3 Inch NPT • BSP & BSPP Available
MATERIAL
Nickel Plated Steel

*See Performance Charts for Details

FEATURES & BENEFITS

High Pressure Applications

- High pressure swivel for use in hydraulic and pneumatic applications.

Corrosion Resistant

- Standard models feature nickel treated carbon steel construction, but are also available in all stainless steel.

GR Seal Technology

- Equipped with a GR seal, which is suitable for most fluids.

Thrust Bearings

- A single acting thrust bearing permits slow rotation at high pressures.

Part Numbers - 1700 Series HP Swivel

Nominal Pipe Size (DN)	Shaft Thread (A)	Part Number	Description
1/4	1/4	750788C	R1813SRKNPT
3/8	3/8	750789C	R1817SRKNPT
1/2	1/2	750790C	R1821SRKNPT
3/4	3/4	750791C	R1827SRKNPT
1	1	750792C	R1834SRKNPT
1-1/8	1-1/4	750793C	R1842SRKNPT
1-1/2	1-1/2	750794C	R1849SRKNPT
1-3/4	2	750795C	R1860SRKNPT
2-1/4	2-1/2	750796C	R1876SRKNPT
2-3/4	3	750797C	R1890SRKNPT

Maximum Operating Pressure (psi)

Nominal Pipe Size (DN)	Shaft Thread (A)	Maximum Pressure (psi)
1/4	1/4	5,075
3/8	3/8	
1/2	1/2	4,350
3/4	3/4	
1	1	3,625
1-1/8	1-1/4	
1-1/2	1-1/2	2,900
1-3/4	2	
2-1/4	2-1/2	2,175
2-3/4	3	

www.duffnorton.com
Ph: (800) 477-5002 • Fax: (704) 588-1994

Dimensions - 1700 Series HP Swivel (Inch)

Nominal Pipe Size (DN)	Shaft Thread (A)	B	C	Overall Length (F)	G	Flats (H)	Overall Dia. (I)
1/4	1/4	1/2	7/16	2-5/8	1-3/4	1/2	1-3/8
3/8	3/8	1/2	1/2	2-3/4	1-15/16	1/2	1-1/2
1/2	1/2	5/8	9/16	3-1/8	2-3/16	3/4	2-1/16
3/4	3/4	3/4	5/8	3-1/2	2-1/2	1	2-1/4
1	1	7/8	3/4	3-3/4	2-9/16	1-1/4	2-1/2
1-1/8	1-1/4	1	3/4	4-3/16	2-3/4	1-1/2	3
1-1/2	1-1/2	1	3/4	4-9/16	3-1/8	1-3/4	3-3/8
1-3/4	2	1-1/8	1	5.12	3-1/4	2-1/4	4
2-1/4	2-1/2	1-1/8	1	5-5/8	3-3/4	2-3/4	5-1/8
2-3/4	3	1-1/4	1-1/8	7-1/8	4-13/16	3-3/8	6-1/8

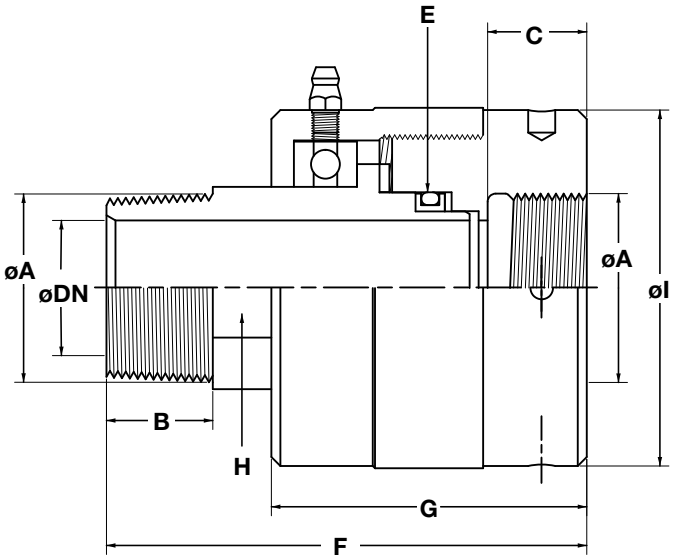

Performance Charts

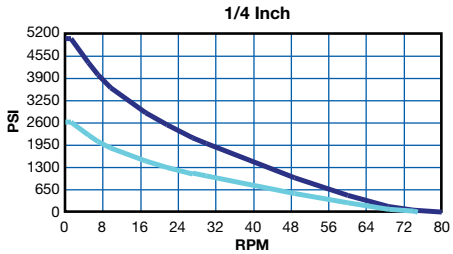

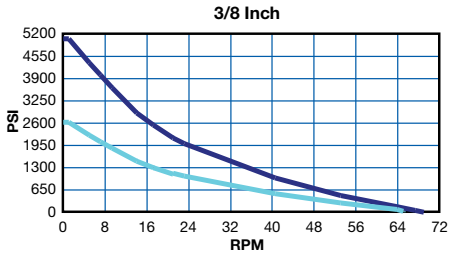

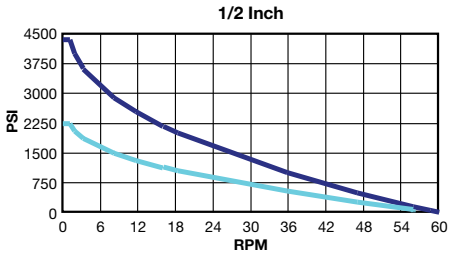

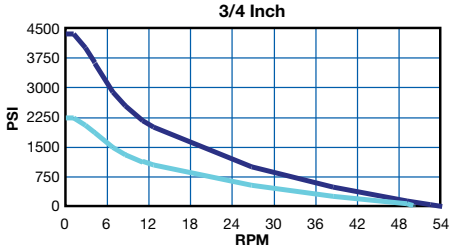

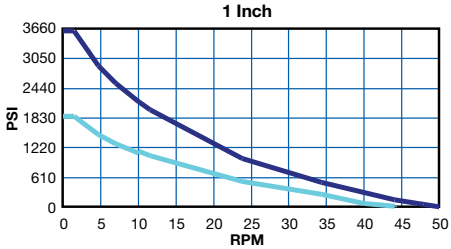

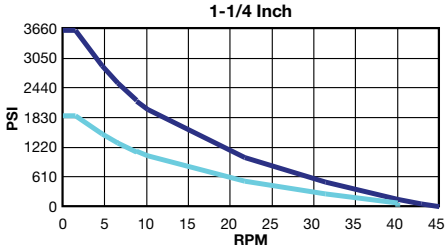

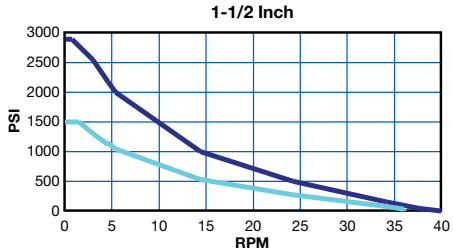

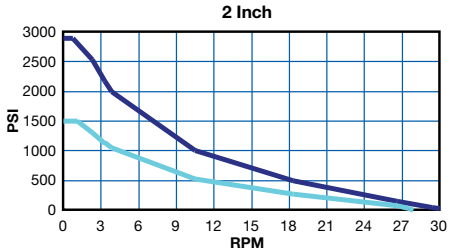

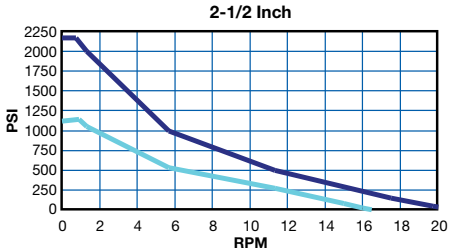

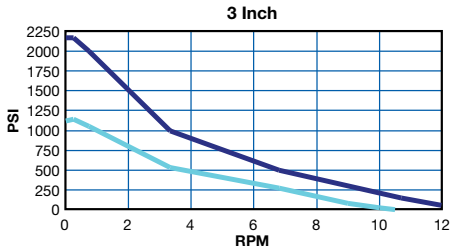

Standard Material

Stainless Steel

ROTARY UNION

1900 SERIES

HIGH PRESSURE SWIVEL

Operating Parameters

MEDIA
Water, Air, Hydraulic Fluid
PRESSURE*
10,150 psi
TEMPERATURE*
248° F
SPEED*
1000 RPM
THREADS
1/4 Inch to 3 Inch NPT
MATERIAL
Nickel Plated Steel

*See Performance Charts for Details

FEATURES & BENEFITS

Hydraulic Applications

- High pressure swivel for use in hydraulic and pneumatic applications.

High Pressure

- Designed for use in very high pressure applications up to 10,150 psi.

Corrosion Resistant

- Standard models feature nickel plated carbon steel construction. Also available in all stainless steel.

GR Seal Technology

- Equipped with a GR seal for superior sealing performance.

Stability At High Pressures

- Equipped with a double acting thrust bearing and a bronze bushing. The bearing permits higher pressure, while the bushing increases the guide of the shaft to allow faster rotating speeds.

Part Numbers - 1900 Series HP Swivel

Shaft Thread (A)	Part Number	Description
1/4	750798C	R1813SRDENPT
3/8	750799C	R1817SRDENPT
1/2	750800C	R1821SRDENPT
3/4	750801C	R1827SRDENPT
1	750802C	R1834SRDENPT
1-1/4	750803C	R1842SRDENPT
1-1/2	750804C	R1849SRDENPT
2	750806C	R1860SRDENPT
2-1/2	750807C	R1876SRDENPT
3	750805C	R1890SRDENPT

Maximum Operating Pressure (psi)

Nominal Pipe Size (DN)	Maximum Pressure (psi)
1/4	10150
3/8	
1/2	8700
3/4	7250
1	
1-1/4	
1-1/2	5800
2	
2-1/2	
3	

www.duffnorton.com
Ph: (800) 477-5002 • Fax: (704) 588-1994

Dimensions - 1900 Series Swivel (Inch)

Shaft Thread (A)	B	C	DN	Overall Length (F)	G	Flats (H)	Overall Diameter (I)	K	L
1/4	3/8	7/16	1/4	3-5/8	2-15/16	13/16	1-15/16	5/8	15/16
3/8	7/16	9/16	3/8	4	3-1/8	1-1/4	2-1/8	1/2	1-7/16
1/2	9/16	5/8	1/2	4-1/8	3-1/8	1-1/4	2-1/8	5/8	1-3/8
3/4	5/8	9/16	3/4	4-3/4	3-1/2	1-5/16	2-1/2	3/4	1-1/2
1	3/4	3/4	13/16	5-1/4	4	2	3-5/16	3/4	2-1/8
1-1/4	13/16	13/16	1-1/8	5-1/2	4-1/8	2-1/8	3-1/2	3/4	2-3/8
1-1/2	13/16	13/16	1-7/16	6	4-5/8	2-3/8	4-1/16	1	2-5/8
2	1	1	1-5/8	6-7/16	4-7/8	2-5/8	4-1/2	1	2-15/16
2-1/2	1-1/16	1-1/8	2	7-1/2	5-3/4	4	6	1-1/8	4-1/4
3	1-1/8	1-1/4	2-1/2	8-1/4	6-7/16	4-3/4	6-13/16	1-1/8	5-1/8

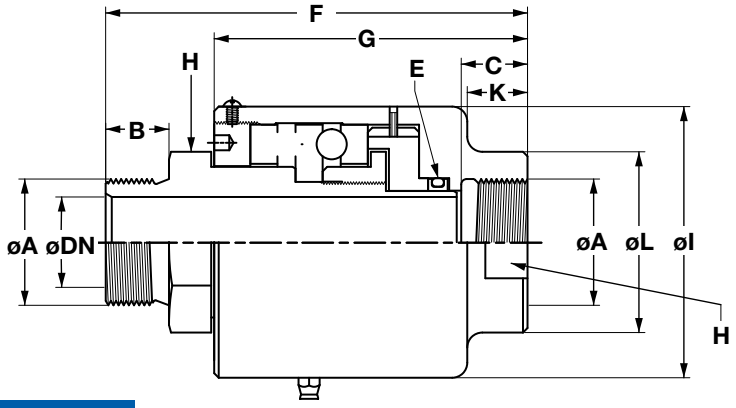

Performance Charts

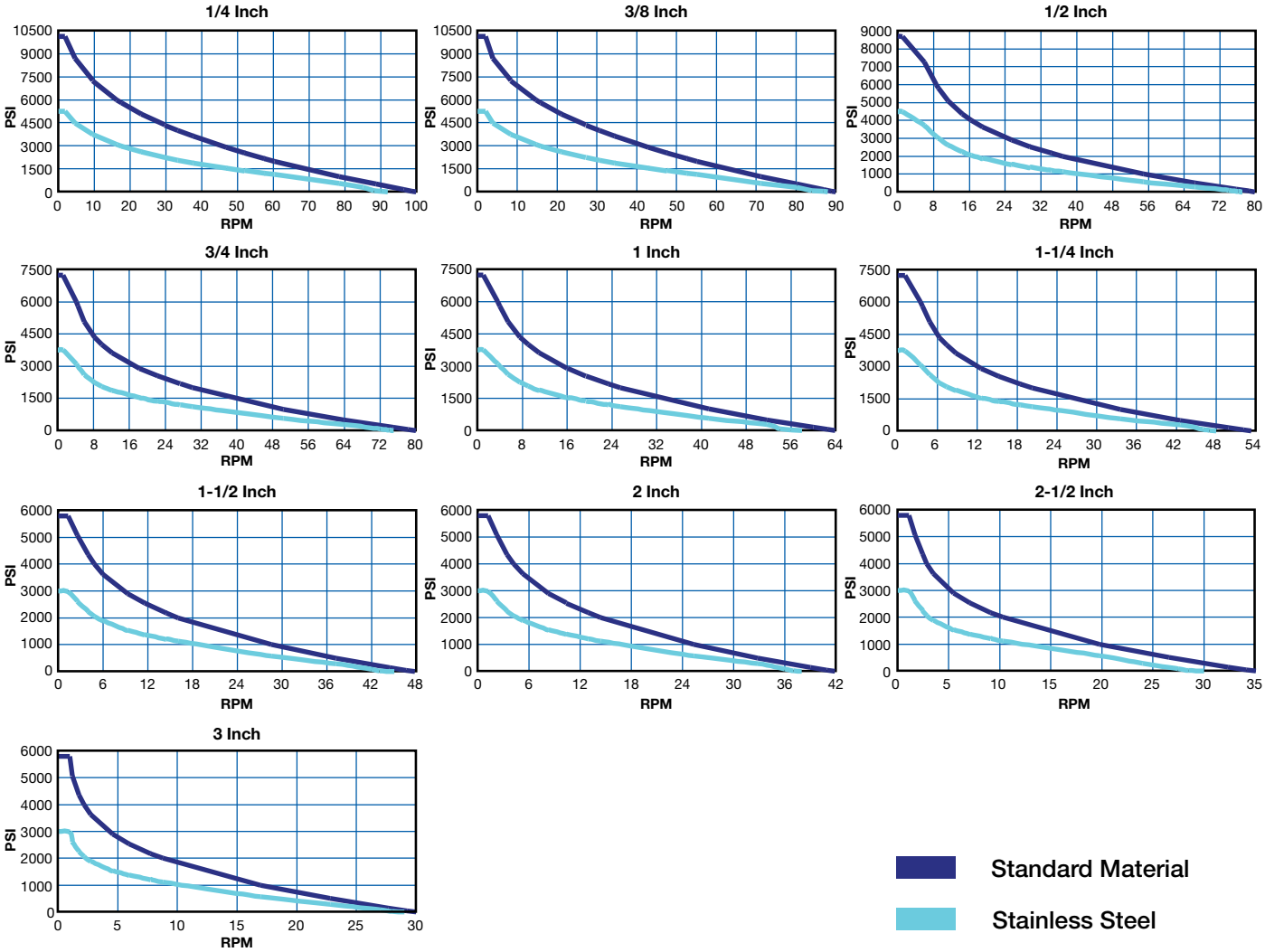

While rotating joints come in many shapes, sizes, and configurations, they always have the same four basic components: housing, a shaft, a bearing (or bearings) and a seal.

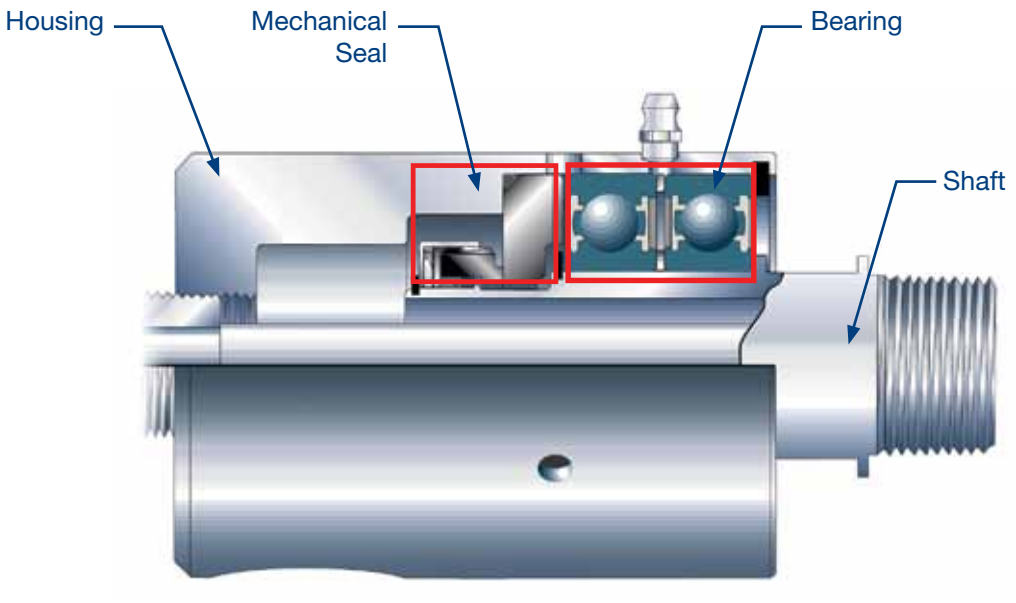

Mechanical Seal

The heart of the rotary union or rotary joint is the seal. The seal prevents the medium (water, oil, air, etc) from leaking outside the rotary union while the rotary union is in operation. Duff-Norton uses four basic types of mechanical seals in its rotary unions: 1) pusher-type end face mechanical seal, 2) non-pusher type end face mechanical seal, 3) lip seals and 4) o-ring seal. Rotary unions may have more than one seal.

Bearing

The second most important part of the rotary union is the bearing. A rotary union may have only one bearing or multiple bearings. Roller bearings, such as ball bearings and tapered roller bearings, or non-roller bearings, like graphite bearings and bronze bushings, may be used in the rotary union. The bearings are always used to allow a part of the joint, either the shaft or the housing, to rotate.

Shaft

The shaft is the component that carries the medium through the rotary union into the drum or roll. In many cases, the shaft will turn with the drum or roll. In some cases, like in larger flanged rotary unions, the shaft may be stationary while the housing rotates. The bearings and seal are typically assembled around the shaft.

Housing

The housing is the component that holds all of the other elements of the rotary union together. The housing has an inlet port, which is a threaded port to which the hose supplying the medium will be attached (See the next page for recommended hose installation). The rotary union may also have an outlet port, if the same joint is being used both to supply fluid to a roll and to remove fluid from the roll. In smaller rotary unions, the housing is stationary. In larger rotary unions, the housing maybe bolted to the drum or roll using a flange. In these cases, the housing rotates at the same speed as the drum.

Single Flow - P

Size (Inch)	Free Flow Area (Square Inch)	Cv
1/4	0.050	2.06
3/8	0.111	2.95
1/2	0.196	5.25
3/4	0.442	11.8
1	0.785	21
1-1/4	1.227	33
1-1/2	1.767	47
2	3.14	84
2-1/2	4.43	113
3	6.49	173
4	12.57	335
5	19.60	523

GRM = $C_V\sqrt{\triangle P}$

Where:

GPM = Flow rate in gallons per minute of water

C_V = Flow factor in gallons of water flow per minute with a 1 psi pressure drop

$\triangle P$ = Pressure drop, psi

Single Flow

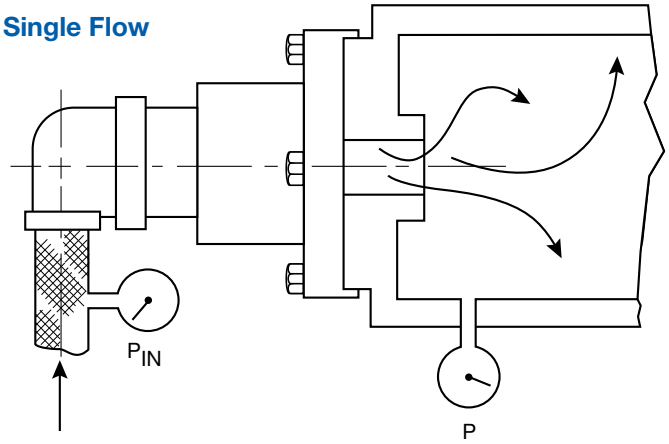

Dual Flow

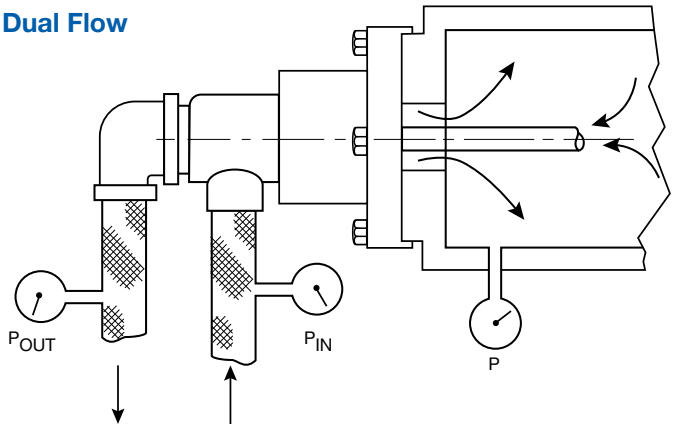

Dual Flow - S, CS, FS, RSP &FRSP

Size (Inch)	Siphon Size	Shaft Area	Cv In	Siphon Area	Cv Out	Cv In and Out
1/4	1/8 Tube	0.065	1.6	0.004	0.11	0.1
	3/16 Tube	0.049	1.2	0.012	0.35	0.34
	1/4 Tube	0.028	0.7	0.025	0.73	0.5
3/8	1/8 Tube	0.099	2.5	0.004	0.11	0.11
	3/16 Tube	0.083	2.1	0.012	0.35	0.34
	1/4 Tube	0.062	1.6	0.025	0.73	0.67
1/2	1/4 Tube	0.147	3.8	0.025	0.73	0.72
	1/8 Pipe	0.068	1.7	0.057	0.6	1.16
3/4	1/8 Pipe	0.312	8.1	0.057	1.6	1.57
	1/4 Pipe	0.212	5.5	0.104	3	2.64
	3/8 Pipe	0.083	2.1	0.191	5.6	1.97
1	1/8 Pipe	0.656	17	0.057	1.6	1.59
	1/4 Pipe	0.556	14	0.104	3	2.94
	3/8 Pipe	0.427	11	0.191	5.6	5
	1/2 Pipe	0.231	6	0.304	8.9	5
1-1/4	1/8 Pipe	1.098	28	0.057	1.6	1.6
	1/4 Pipe	0.998	26	0.104	3	2.97
	3/8 Pipe	0.869	22	0.191	5.6	5.43
	1/2 Pipe	0.673	17	0.304	8.9	7.88
	3/4 Pipe	0.361	9.4	0.533	15	8
1-1/2	1/4 Pipe	1.538	40	0.104	2	2
	3/8 Pipe	1.409	36	0.191	5.6	5.53
	1/2 Pipe	1.213	31	0.304	9	8.6
	3/4 Pipe	0.901	23	0.533	15	12.5
	1 Pipe	0.409	10	0.864	23	9.2
2	3/8 Pipe	2.784	72	1.495	5.6	5.7
	1/2 Pipe	2.588	67	0.304	9	8.95
	3/4 Pipe	2.276	59	0.533	15	14.7
	1 Pipe	1.784	46	0.864	23	20.8
	1-1/4 Pipe	0.978	25	1.495	44	21.8
2-1/2	1/2 Pipe	3.876	100	2.036	8.9	8.9
	3/4 Pipe	3.564	92	3.355	15	14.8
	1 Pipe	3.072	80	0.304	23	22.2
	1-1/4 Pipe	2.266	59	0.533	44	35.2
	1-1/2 Pipe	1.595	41	0.864	60	33.9
2-1/2	2 Pipe	0.478	12	1.495	98	11.8
3	1/2 Pipe	5.937	154	2.036	8.9	8.9
	3/4 Pipe	5.625	146	3.355	15	14.9
	1 Pipe	5.133	133	4.788	23	23
	1-1/4 Pipe	4.327	112	1.495	44	40.7
	1-1/2 Pipe	4.106	107	2.036	59	52
	2 Pipe	2.061	53	3.355	98	46.7
3	2-1/2 Pipe	0.576	15	4.788	140	14
4	1-1/4 Pipe	10.402	270	1.495	44	43.4
	1-1/2 Pipe	9.731	254	2.036	59	58
	2 Pipe	8.136	212	3.355	98	89
	2-1/2 Pipe	6.074	158	4.788	140	105
	3 Pipe	2.945	76	7.393	216	71.7
5	1-1/4 Pipe	17.471	450	1.495	44	43.7
	1-1/2 Pipe	16.8	430	2.036	60	59.8
	2 Pipe	15.205	390	3.355	98	95.1
	2-1/2 Pipe	13.143	340	7.788	140	129
	3 Pipe	10.014	260	7.393	216	166

RECOMMENDED HOSE INSTALLATION

Flexible hose must be used to connect each rotary union to its supply or drain piping. Use braided metal hose for all applications involving hot fluids, such as hot water, hot oil or steam. Use two-ply rubber hose for cooling water, refrigerants, air and vacuum service.

Allow for an offset between the rotary union joint and the rigid pipe as shown in Exhibit C. It is important to allow a slight curve in the hose to allow the hose to “float”. This will prevent a side load from being placed on the rotary union. A side load will greatly reduce the life of the rotary union.

Dimensions - Thread and Hose (Inch)

Rotary Union Thread Size	Hose Size and Length	Dimensions	
		A	B
1/2	1/2 x 10	2-5/8	1
3/4	3/4 x 10	2-1/2	11-7/8
1	1 x 14	3-1/4	14-1/4
1-1/4	1-1/4 x 16	3-1/2	16-1/4
1-1/2	1-1/2 x 18	3-3/4	18-1/2
2	2 x 21	4-3/8	21-3/4
2-1/2	2 x 21	4-3/8	21-3/4
	2-1/2 x 24	4-1/4	24-3/4
3	2-1/2 x 24	4-1/4	24-3/4
	3 x 26	4-1/2	28-5/8
3-1/2	3 x 26	8	28-3/8
4	4 x 26	8	2

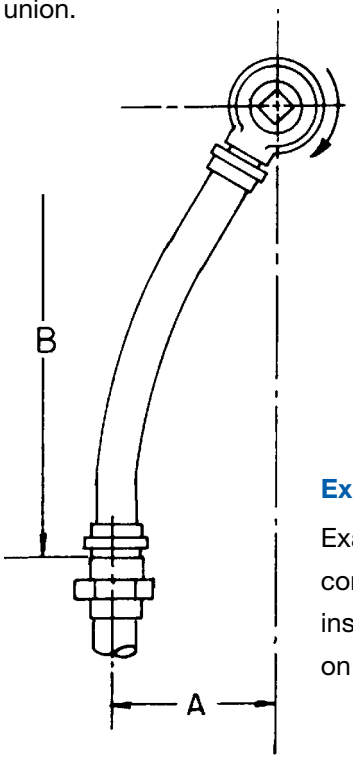

Exhibit C

Example of the correct way to install flexible hose on a Rotary Union.

NOTE

Duff-Norton has made every effort to ensure that the information contained in the publication is accurate and reliable. Determining the suitability of our products for specific applications is the user’s responsibility.

Warranty

Subject to the conditions stated herein, Duff-Norton will repair or replace, without charge, any parts proven to Duff-Norton’s satisfaction to be defective in materials or workmanship. Claims must be made within one year, except Series 9000 and 8000,90 days REM.

Duff-Norton will not repair or replace any parts that become unusable and show clear evidence of improper maintenance, eccentric loading, overloading, excessive heat, chemical or abrasive wear, tampering or abuse. Equipment and accessories not manufactured by Duff-Norton are warranted only to the extent the manufacturer warrants them, and only if the claimed defect arose during normal use, application and service. Equipment that has been altered or modified by anyone without Duff-Norton’s authorization is not warranted by Duff-Norton. Except as stated herein, Duff-Norton makes no other warranties, express or implied including warranties of merchantability and fitness for a particular purpose.

TERMS AND CONDITIONS

All sales by Seller are made pursuant to the following terms. No other or additional terms or conditions are or will be accepted.

ACCEPTANCE OF ORDERS -

All orders, whether placed directly or through an agent, and all subsequent amendments thereto, are subject to a final approval and acceptance by Seller's main office.

LIMITATION OF WARRANTIES, REMEDIES AND DAMAGES –

THE WARRANTY STATED BELOW IS GIVEN IN PLACE OF ALL OTHER WARRANTIES, EXPRESS OR IMPLIED, OF MERCHANTABILITY, FITNESS FOR A PARTICULAR PURPOSE OR OTHERWISE. NO PROMISE OR AFFIRMATION OF FACT MADE BY ANY AGENT OR REPRESENTATIVE OF SELLER SHALL CONSTITUTE A WARRANTY BY SELLER OR GIVE RISE TO ANY LIABILITY OR OBLIGATION.

Seller warrants that on the date of its delivery to carrier the goods are free from defects in workmanship and materials.

SELLER'S SOLE OBLIGATION IN THE EVENT OF BREACH OF WARRANTY OR CONTRACT OR FOR NEGLIGENCE OR OTHERWISE WITH RESPECT TO GOODS SOLD SHALL BE EXCLUSIVELY LIMITED TO REPAIR OR REPLACEMENT, F.O.B. SELLER'S POINT OF SHIPMENT, OF ANY PARTS WHICH SELLER DETERMINES TO HAVE BEEN DEFECTIVE or if Seller determines that such repair or replacement is not feasible, to a refund of the purchase price upon return of the goods to Seller.

Any action against Seller for breach of warranty, negligence or otherwise must be commenced within one year after such cause of action accrues.

NO CLAIM AGAINST SELLER FOR ANY DEFECT IN THE GOODS SHALL BE VALID OR ENFORCEABLE UNLESS BUYER'S WRITTEN NOTICE THEREOF IS RECEIVED BY SELLER WITHIN ONE YEAR FROM THE DATE OF SHIPMENT.

Seller shall not be liable for any damage, injury or loss arising out of the use of the goods if, prior to such damage, injury or loss, such goods are (1) damaged or misused following Seller's delivery to carrier; (2) not maintained, inspected, or used in compliance with applicable law and Seller's written instructions and recommendations; or (3) installed, repaired, altered or modified without compliance with such law, instructions or recommendations.

UNDER NO CIRCUMSTANCES SHALL SELLER BE LIABLE FOR INCIDENTAL OR CONSEQUENTIAL DAMAGES AS THOSE TERMS ARE DEFINED IN SECTION 2-715 OF THE UNIFORM COMMERCIAL CODE.

TERMS OF PAYMENT -

Unless otherwise stated herein, payment of each invoice is required within thirty (30) days after date of shipment. Any balance unpaid after the required payment date shall be subject to a service charge of 1% per month from such date.

PRICE ADJUSTMENTS -

Amendments made by the Buyer to orders already placed shall, without formal notice to the Buyer, be subject to extra charges. If the estimated shipping date for the goods is more than sixty (60) days after date of order, the price of the goods are subject to increase by Seller.

TAXES -

Any sales, use, excise, and other taxes applicable to this transaction and the goods and/or services furnished by Seller are not included in the price and shall be paid by Buyer when due. If Seller pays any such taxes, Buyer shall reimburse Seller upon demand.

INDEMNIFICATION AND SAFE OPERATION -

Buyer shall comply with and require its employees to comply with directions set forth in instructions and manuals furnished by Seller and shall use and require its employees to follow such instructions and manuals and to use reasonable care in the use and maintenance of the goods. Buyer shall not remove or permit anyone to remove any warning or instruction signs on the goods. In the event of personal injury or damage to property or business arising from the use of the goods, Buyer shall, within forty-eight (48) hours thereafter, give Seller written notice of such injury or damage. Buyer shall cooperate with Seller in investigating any such injury or damage and in the defense of any claims arising therefrom.

If Buyer fails to comply with this section or if any injury or damage is caused, in whole or in part, by Buyer's failure to comply with applicable federal or state safety requirements, Buyer shall indemnify and hold Seller harmless against any claims, loss or expense for injury or damage arising from the use of the goods.

GOVERNING LAW -

This agreement shall be governed by and construed under the laws of the State of New York.

DELIVERY AND DELAYS -

Unless otherwise specified herein, deliveries shall be F.O.B. Seller's point of shipment and risk of loss shall pass to Buyer upon Seller's delivery to carrier. All shipping dates are approximate and Seller shall not be liable for loss or damage because of delays occasioned by labor disputes, damage to facilities, or failure of suppliers or subcontractors to meet scheduled deliveries or any other cause beyond Seller's reasonable control or making its performance commercially impracticable.

Not withstanding other provisions hereof, if shipment is delayed at Buyer's request, the goods shall be deemed to be stored at Buyer's risk and expense and Seller may thereupon bill Buyer for the full price and storage costs. Buyer shall pay such bill within 30 days after mailing thereof.

BUYER'S INSPECTION UPON RECEIPT OF SHIPMENT -

Buyer shall inspect the goods as soon as received. If any loss or damage is discovered, Buyer must notify both the carrier and Seller at once. Seller will cooperate with Buyer in filing claims with the carrier.

CHANGES AND CANCELLATION -

Seller reserves the right to change or cancel any order whenever circumstances require allocation of production or delivery or Seller deems change or cancellation to be necessary to comply with applicable laws, ordinances, regulations, directives or administrative actions. Seller reserves the right to make changes in materials or design which it determines appropriate for the goods.

SECURITY INTEREST AND REPOSSESSION -

Until full payment has been made therefor, Seller shall have a security interest in goods shipped to Buyer and the goods shall remain personal property. Upon request Buyer shall execute and deliver to Seller security agreements and financing statements further evidencing Seller's security interest. Buyer authorizes Seller to file a financing statement or statements relating to the goods, without Buyer's signature thereon, as Seller may deem appropriate and appoints Seller as Buyer's attorney-in-fact for the limited purpose of executing (without requiring Seller to do so) financing statements in Buyer's name and performing other acts which Seller deems appropriate to perfect and continue its security interest and to protect and preserve the goods.

In the event Buyer defaults in making any payment due Seller, Seller in addition to any other rights or remedies provided by law, shall have the right, with or without legal process, to enter the place where said goods are located and to repossess the goods in accordance with the Uniform Commercial Code.

ASSURANCES -

Shipment by Seller shall at all times be subject to the prior approval of its credit personnel and Seller may, at any time, decline to make shipment except upon receipt of prior payment or upon other terms and conditions or security satisfactory to such personnel.

PATENTS -

Except as to goods manufactured according to design supplied by Buyer, Seller will defend and hold Buyer free and harmless in a suit or proceeding brought against Buyer insofar as it is based on a claim that use of the goods by Buyer constitutes an infringement of any existing U.S. Patents, provided, however, that Buyer gives Seller prompt written notice of such suit or proceeding; permits Seller, through its counsel, to defend and/or settle the same; and gives Seller all necessary information, assistance and authority to enable Seller so to do. If Buyer's use of the goods is held to constitute infringement and further use is enjoined, Seller shall, at its option, either (i) procure for Buyer the right to continue using the goods; or (ii) replace the goods with non-infringing goods; or (iii) modify the goods to non-infringing goods. The foregoing states Seller's entire liability for patent infringement and shall not be construed to render Seller liable for damages based on product output.

MISCELLANEOUS -

This instrument constitutes the entire agreement between Seller and Buyer, superseding all previous understandings and writings regarding this transaction. Any amendment or modification of this Agreement shall be void unless in writing and signed by Seller.

No delay or omission by Seller in exercising any right or remedy hereunder shall be a waiver thereof or of any other right or remedy, and no single or partial exercise thereof shall preclude any other or further exercise thereof or the exercise of any other right or remedy. All rights and remedies of Seller are cumulative.

Sales made pursuant to this Agreement shall be governed by the Uniform Commercial Code as the same may from time to time be construed and in effect in the state wherein Seller has its main office.

ARBITRATION -

All disputes that may arise between the parties regarding the interpretation of the contract and the legal effect of the contract shall, to the exclusion of any court of law, be arbitrated and determined in accordance with the latest Commercial Arbitration Rules of the American Arbitration Association. The arbitration proceeding shall be held in the city in that state where the principal office of the Seller is located. The parties recognize and consent to the above mentioned arbitration association's jurisdiction over each and every one of them.

USTS rev. 2/98

MOTION TECHNOLOGY

SCREW JACKS

LINEAR ACTUATORS

ROTARY UNIONS

ACME AND BALL SCREW & NUTS

Duff-Norton®
Columbus McKinnon Engineered Products

P.O. Box 7010 • Charlotte, NC 28241-7010
Phone: (800) 477-5002 • (704) 588-4610
Fax: (704) 588-1994
Email: duffnorton@cmworks.com
www.duffnorton.com

Duff-Norton® UL REGISTERED FIRM ISO 9001:2015 10000677 QM15

COLUMBUS McKINNON CORPORATION

2017 © Duff-Norton - A Columbus McKinnon Company
All rights reserved.

DN-RUCAT
__M 08/17