2015 CATALOGUE

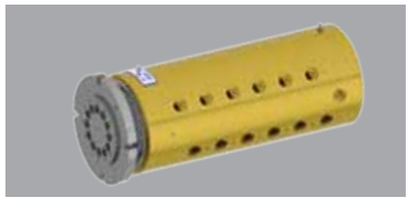

ROTARY JOINTS
ROTATING JOINTS
ROTARY UNIONS

FOR
- WATER
- STEAM
- HOTOIL
- HYDRAULIC
- PNEUMATIC
- VACUUM
- COOLANTS
- CUTTING FLUIDS
- SPECIAL APPCICATIONS

www.rotofluid.com.tr

SELECTION CHART

ROTATING JOINTS & ACCESSORIES

SIZE	MODEL	MEDIUM						APPLICATION PARAMETERS			
		WATER	STEAM	HOT OIL	PNEUMATIC	HYDRAULIC	COOLANT	MAX. PRESSURE Bar / psi	MAX. TEMPERATURE °C / °F	MAX. SPEED (RPM)	PAGE
1/4" – 2" (DN08) – (DN50)	400	√	√	√	√	√		50 / 750	160 / 320	3,500	3-9
1/4" – 2" (DN08) – (DN50)	400A	√	√	√	√			50 / 750	160 / 320	3,500	10-13
1/4" – 2" (DN08) – (DN50)	400B	√						50 / 750	160 / 320	100	14-17
2" – 4" (DN50) – (DN100)	500	√						10 / 150	120 / 250	750	21-32
3/4" – 1 1/2" (DN20) – (DN25)	50	√						10 / 150	120 / 250	100	33-36
1/8" – 1 1/2" (DN06) – (DN40)	100				√	√		10 / 150	120 / 250	3,500	37-39
1/2" – 2" (DN15) – (DN50)	200	√	√					17 / 250	200 / 400	400	40-47
1/2" – 2" (DN15) – (DN50)	200HO			√				10 / 150	315 / 600	400	40-47
1/2" – 5" (DN15) – (DN125)	900S	√	√					17 / 250	200 / 400	600	48-54
1/2" – 5" (DN15) – (DN125)	900S-HO			√				10 / 150	315 / 600	600	48-54
1/2" – 5" (DN15) – (DN125)	900R	√	√					17 / 250	200 / 400	200	55-61
1/2" – 5" (DN15) – (DN125)	900R-HO			√				10 / 150	315 / 600	200	55-61
1/2" – 5" (DN15) – (DN125)	900P	√	√					17 / 250	200 / 400	100	62-65
1/2" – 5" (DN15) – (DN125)	900P-HO			√				10 / 150	315 / 600	100	62-65
1/8" – 1 1/2" (DN06) – (DN40)	600				√	√		200 / 2,900	120 / 250	250	66-69
1/2" x 1/8" – 1" x 3/8" (DN15xDN06) – (DN25xDN10)	600+1				√	√		200 / 2,900	120 / 250	250	66-69
2x1/4" – 2x3/4" (2xDN08) – (2xDN20)	700				√	√		200 / 2,900	120 / 250	250	70-72
1/8" – 1" (DN06) – (DN25)	10	√			√	√		450 / 6,500	120 / 250	250	73-76
1/8" – 1" (DN06) - (DN25)	20				√	√		12 / 170	120 / 250	3,000	77-79
1/2" – 1 1/2" (DN15) – (DN40)	300A	√						10 / 150	120 / 250	100	80-81
1/2" – 1 1/2" (DN15) – (DN40)	300B	√						10 / 150	120 / 250	100	82-83
1/2" – 1 1/2" (DN15) – (DN40)	300C	√						10 / 150	120 / 250	100	84-85
1/2" – 1 1/2" (DN15) – (DN40)	300V	√						10 / 150	120 / 250	100	89
1/4" – 3/8" (DN08) – (DN10)	800	√					√	70 / 1000	120 / 250	10,000	90-91
1/4" – 3/8" (DN08) – (DN10)	800S	√					√	70 / 1000	120 / 250	15,000	92-93
1/4" – 3/8" (DN08) – (DN10)	800RS	√					√	70 / 1000	120 / 250	20,000	94-95
DUAL FLOW ELBOWS											20
SIPHON ELBOWS											99
FLANGE SETS											100
LUBRICATION INSTRUCTIONS											101
ASSEMBLY INSTRUCTIONS											102
APPLICATION ANALYSES FORM											104

All rights reserved, may not be copied in whole or in part without written confirmation.
Subject to both technical and dimentional changes without prior notice.
Viton & Teflon are registered trademark of Dupont.

ROTOFLUID is a brand of **ESZ Makina İnş. San. Ve Dış Tic. Ltd. Şti.**; which is an internationally oriented, ISO 9001 certified design & manufacturing company located in Istanbul, Turkey.

ROTOFLUID offers solutions for

SEAL RINGS (CARBON GRAPHITE, SIC, TUC, CERAMIC)
MECHANICAL SEALS
ROTARY UNIONS, ROTARY JOINTS, ROTATING JOINTS
SWIVEL JOINTS
SLIP RINGS

ROTOFLUID rotating joints are used to transfer medium from stationary supply lines to rotating or moving machine parts. In addition, rotating joints can be designed with multiple flow passages and handle different media simultaneously. Whenever media will be transferred to rotating or swiveling machine parts, ROTOFLUID has the right solution.

ROTOFLUID products are used in Textile, Paper, Food, Petrol, Aluminium, Automotiv, Cement, Leather, Lumber, Marine, Petrochemical, Plastics, etc.

With its customer orientated service, customer satisfaction is guaranteed. **ROTOFLUID** works not only as an industrial products supplier, but also acts as a solution providing partner of our valued customers.

A team of qualified engineers and product specialists are always available to find the right solution to customer needs. In order to meet the demands of customers, we use 2D/3D CAD and SIMULATION software.

ROTOFLUID manufacturing is state of the art manufacturing facility, modern CNC machining centers and advanced quality systems certified by ISO 9001.

From the receipt of the raw materials to the shipment of the final product, our total production process is subject to the strictest quality controls. The control of the manufacturing process warrantees that all the products are manufactured within the technical specification. Every delivered product was tested on modern benches under customer's application parameters.

Most of the products and spare parts are stocked at the factory and can be delivered in a very short time. When in need of a special product, customer receives quotation with technical information and drawings. After confirmation of the order, finished product is supplied in a very short time.

We offer repair service in our center and also offer local support for customer needs. We analyze and evaluate failure of our products and offer cost offers as a part of our service. All **ROTOFLUID** products can also be repaired at the field. **ROTOFLUID** supplies spare parts not only as kit, but also supplies single spare parts such as o-ring, seal ring, etc. so that all mechanics can only buy what they need and make repairs with very low costs.

ROTOFLUID service covers; from consulting in the selection of products in line with customer requirements, to installation and commissioning of the products and complete after-sales service.

ROTOFLUID SEALING SYSTEM

ROTOFLUID uses different sealing systems depending on the applications and products.

1-CONVENTIONAL SEALING SYSTEM

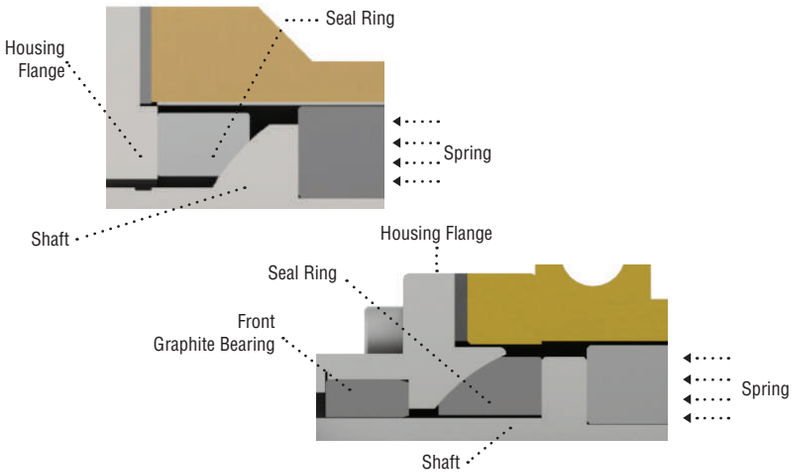

Conventional seal system is also called pressure type sealing; which sealing is assured with pressure and all forces applying on the seal faces.

According to application parameters, all seals are designed for min. seal wear on the sealing faces for longer life.

Depending on the application and models; **ROTOFLUID** uses convex and concave seal rings which are self-aligning seals and made of proprietary materials.

2-BALANCED SEALING SYSTEM

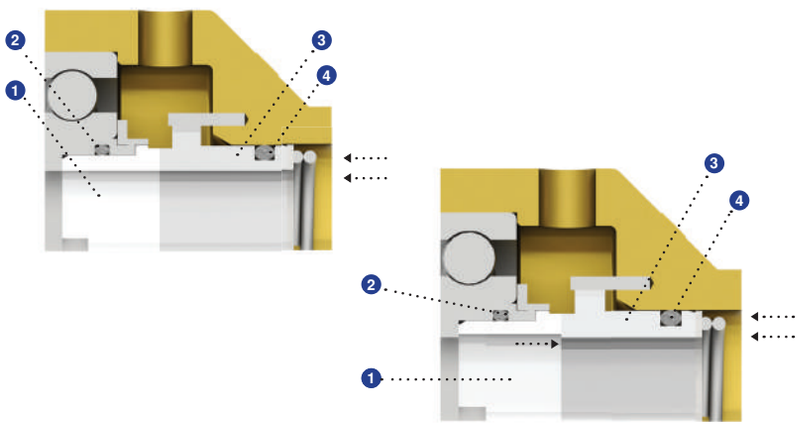

Seal theory of rotating joints is known as "when pressure on the seal faces increases, force on the sealing surface increases, which will result tighter and better sealing" But when force on the seal faces increases, friction between seal faces increases which results higher torque for rotation.

With Balanced Sealing System, the force on the seal faces kept min. regardless of the pressure of the fluid and assures lower torque with longer seal life is assured.

Balanced Mechanical Seal Elements

- **(1) Rotary Seal**
- **(2) Rotary Seal O-ring**
- **(3) Floating Seal Ring**
- **(4) Floating Seal O-ring**

1	2	3	4
CARBON GRAPHITE	VITON NBR EPDM	CARBON GRAPHITE	VITON NBR EPDM
SIC		SIC	
TUC		TUC	
		CERAMIC	

4-O-RING & BACK-UP SYSTEM

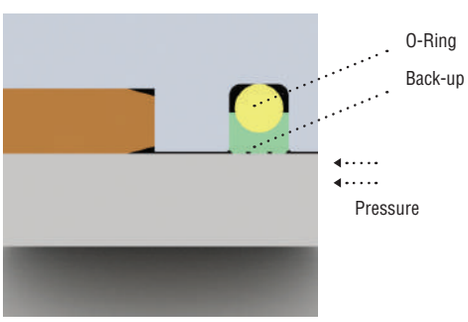

ROTOFLUID uses o-ring & back-up sealing in most of the pneumatic & hydraulic rotary unions. O-ring is used for static sealing and teflon back-up is used for dynamic sealing.

Seal materials of the o-ring and back-up changes according to application parameters.

ROTOFLUID also uses different seal types with different configurations for special applications.

400 SERIES

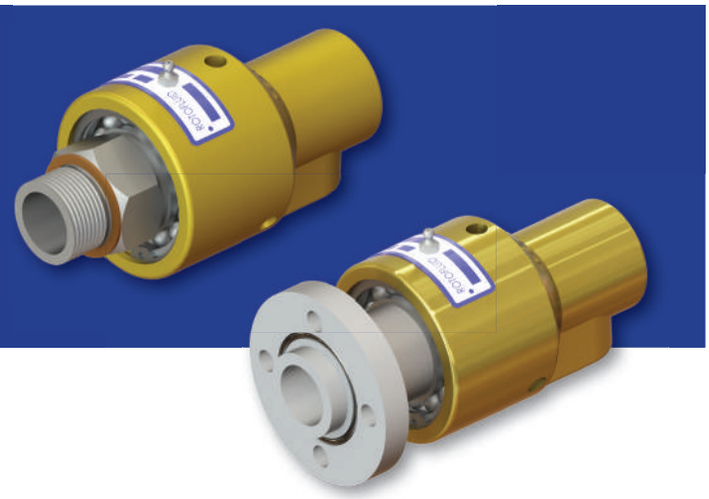

for GENERAL PURPOSES
for WATER, STEAM, HOT OIL, AIR, VACUUM
1/4" (DN08) - 2" (DN50)

- Single flow and dual flow design
- Self supported rotating joint
- Radial housing connection
- Balanced mechanical seals
- Easy and quick replacement of sealing elements
- Forged brass housing
- Stainless steel internal parts
- Vent holes on housing

Special Options

- Threaded vent holes with plugs
- Nickel plated housing
- Splash - proof bearing

Application Parameters

Max. Water Pressure		: 50bar	750psi
Max. Water Temperature		: 160°C	320°F
Max. Steam Pressure		: 1 bar	14 psi
Max. Steam Temperature		: 120°C	250°F
Max. Hot Oil Pressure		: 7 bar	100psi
Max. Hot Oil Temperature		: 160°C	320°F
Max. Speed	(1/4"-3/4")	: 3500 RPM	3500 min^{-1}
	(1")	: 3000 RPM	3000 min^{-1}
	(1 1/4" - 1 1/2")	: 2500 RPM	2500 min^{-1}
	(2")	: 750 RPM	750 min^{-1}

Avoid working with max. speed at max. pressure

For further information, please consult FACTORY, or your local representative

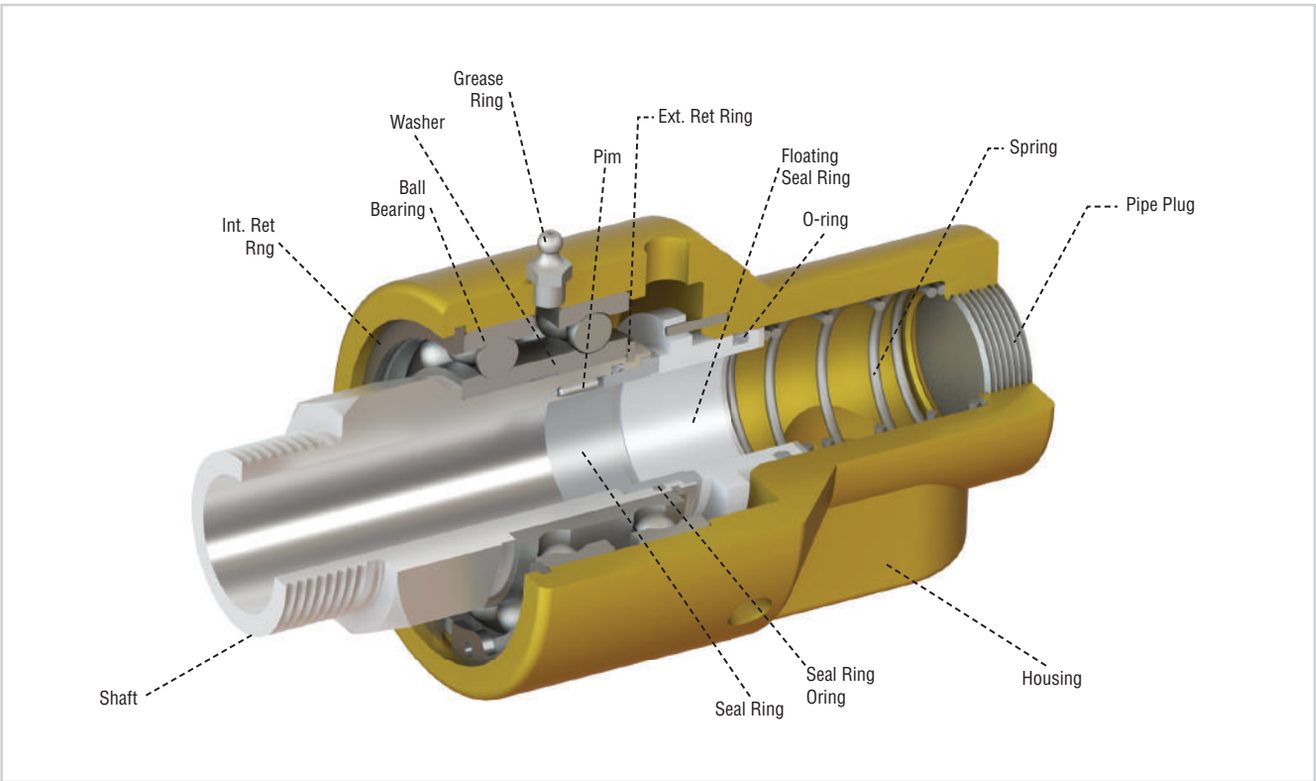

400 SERIES SINGLE FLOW

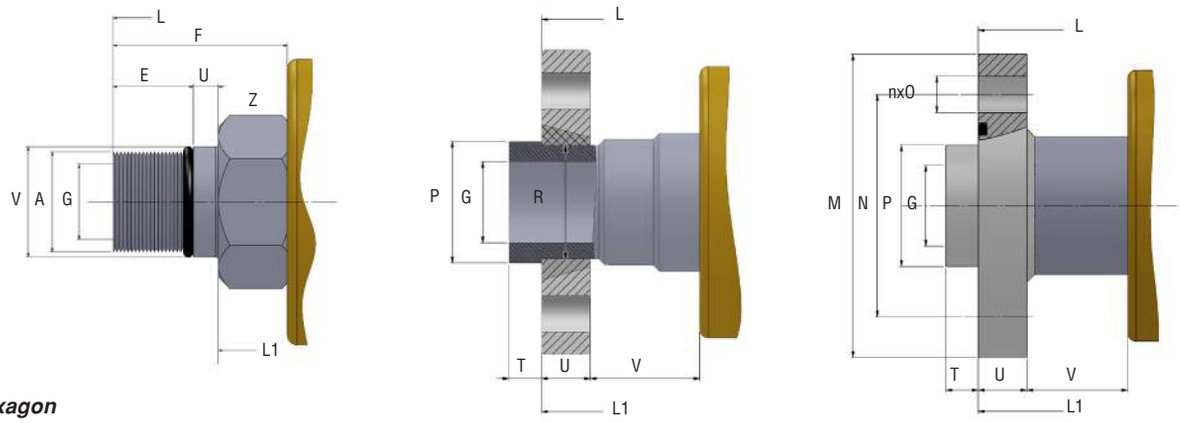

Z: hexagon

SHAFT SIZE			SEAL TYPE				B
A		THREAD TYPE	CARBON-SIC		SIC-SIC		
			STOCK CODE LH	STOCK CODE RH	STOCK CODE LH	STOCK CODE RH	
DN08	1/4"	1/4" BSPP	402-1121-302L	402-1121-302R	402-1321-302L	402-1321-302R	1/4" NPT
		1/4" BSPP	402-3121-302L	402-3121-302R	402-3321-302L	402-3321-302R	1/4" BSPP
DN10	3/8"	3/8" BSPP	403-1121-303L	403-1121-303R	403-1321-303L	403-1321-303R	3/8" NPT
		3/8" BSPP	403-3121-303L	403-3121-303R	403-3321-303L	403-3321-303R	3/8" BSPP
DN15	1/2"	1/2" BSPP	405-1121-305L	405-1121-305R	405-1321-305L	405-1321-305R	1/2" NPT
		1/2" BSPP	405-3121-305L	405-3121-305R	405-3321-305L	405-3321-305R	1/2" BSPP
		PLOT M20x1.5	405-3121-520LP	405-3121-520RP	405-3321-520LP	405-3321-520RP	
		QR	405-3121-0010	405-3121-0010	405-3321-0010	405-3321-0010	
DN20	3/4"	3/4" BSPP	407-1121-307L	407-1121-307R	407-1321-307L	407-1321-307R	3/4" NPT
		3/4" BSPP	407-3121-307L	407-3121-307R	407-3321-307L	407-3321-307R	3/4" BSPP
		PLOT M27x1.5	407-3121-527LP	407-3121-527RP	407-3321-527LP	407-3321-527RP	
		M35x1.5	407-3121-535L	407-3121-535R	407-3321-535L	407-3321-535R	
		QR	407-3121-0010	407-3121-0010	407-3321-0010	407-3321-0010	
		FLANGED	407-3121-0020	407-3121-0020	407-3321-0020	407-3321-0020	
DN25	1"	1" BSPP	410-1121-310L	410-1121-310R	410-1321-310L	410-1321-310R	1" NPT
		1" BSPP	410-3121-310L	410-3121-310R	410-3321-310L	410-3321-310R	1" BSPP
		M35x1.5	410-3121-535L	410-3121-535R	410-3321-535L	410-3321-535R	
		QR	410-3121-0010	410-3121-0010	410-3321-0010	410-3321-0010	
		FLANGED	410-3121-0020	410-3121-0020	410-3321-0020	410-3321-0020	
DN32	1 1/4"	1 1/4" BSPP	412-1121-312L	412-1121-312R	412-1321-312L	412-1321-312R	1 1/4" NPT
		1 1/4" BSPP	412-3121-312L	412-3121-312R	412-3321-312L	412-3321-312R	1 1/4" BSPP
		QR	412-3121-0010	412-3121-0010	412-3321-0010	412-3321-0010	
		FLANGED	412-3121-0020	412-3121-0020	412-3321-0020	412-3321-0020	
DN40	1 1/2"	1 1/2" BSPP	415-1121-315L	415-1121-315R	415-1321-315L	415-1321-315R	1 1/2" NPT
		1 1/2" BSPP	415-3121-315L	415-3121-315R	415-3321-315L	415-3321-315R	1 1/2" BSPP
		M50x1.5	415-3121-550L	415-3121-550R	415-3321-550L	415-3321-550R	
		QR	415-3121-0010	415-3121-0010	415-3321-0010	415-3321-0010	
		FLANGED	415-3121-0020	415-3121-0020	415-3321-0020	415-3321-0020	
DN50	2"	2" BSPP	420-1121-320L	420-1121-320R	420-1321-320L	420-1321-320R	2" NPT
		2" BSPP	420-3121-320L	420-3121-320R	420-3321-320L	420-3321-320R	2" BSPP
		QR	420-3121-0010	420-3121-0010	420-3321-0010	420-3321-0010	
		FLANGED	420-3121-0020	420-3121-0020	420-3321-0020	420-3321-0020	

400 SERIES SINGLE FLOW

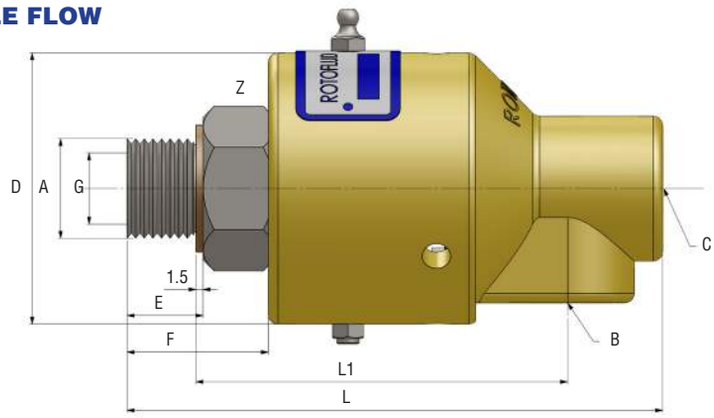

Single flow joints are used when supply and return lines are connected to opposite sides of the cylinder.

C	D	E	F	G	L	L1	M	N	nxO	P	R	T	U	V	Z	WEIGHT kg (lb)
1/8" NPT	45	12	24.5	8	91.5	65	-	-	-	-	-	-	-	-	22	0.7 (1.43)
1/8" BSPP																
1/4" NPT	45	12	24.5	9	91.5	65	-	-	-	-	-	-	-	-	22	0.7 (1.43)
1/4" BSPP																
3/8" NPT	57	16	30	15	113	78	-	-	-	-	-	-	-	-	30	1.3 (2.65)
3/8" BSPP		16.5	34.75	15	117.75	77	-	-	-	-	-	-	5	22 g6	30	
		-	-	15	119	99	-	-	-	24	22	6	11	25	-	
1/2" NPT	67	17	33.5	20	132.5	90.5	-	-	-	-	-	-	-	-	35	1.6 (3.27)
1/2" BSPP		15	37.5	20	136.5	89	-	-	-	-	-	-	6	28 g6	35	
		15	37.5	20	136.5	96.5	-	-	-	-	-	-	-	-	41	
		-	-	20	138	111.5	-	-	-	30	28	8	14	25	-	
				20	136	109.5	75	55	4x9	30	-	8	12	25		2.2 (4.49)
3/4" NPT	75	20	39.5	25	151.5	104.5	-	-	-	-	-	-	-	-	41	2.5 (5.10)
3/4" BSPP							-	-	-	-	-	-	-	-		
		-	-		150.75	122	-	-	-	35	33	8	14	24.75	-	
					150	121	80	60	4x9	35	-	8	12	25.75		3.2 (6.53)
1" NPT	88	26	53	32	190	131.5	-	-	-	-	-	-	-	-	50	3.5 (7.14)
1" BSPP		-	-	32	181	147	-	-	-	45	43	8	14	30	-	
				32	179	145	100	75	4x11	45	-	8	12	30		4.5 (9.18)
1 1/4" NPT	105	28	56	40	206.5	139.5	-	-	-	-	-	-	-	-	60	5 (10.20)
1 1/4" BSPP							-	-	-	-	-	-	-	-		
		-	-		197.5	157	-	-	-	50	48	10	17	30	-	
					195.5	155	105	80	4x11	50	-	10	15	30		6 (12.24)
1 1/2" NPT	115	30	62	50	238	159.5	-	-	-	-	-	-	-	-	70	7.5 (15.31)
1 1/2" BSPP		-	-		223	173	-	-	-	65	63	10	17	30	-	
					221	171	130	100	4x11	65	-	10	15	30		9 (18.37)

400 SERIES DUAL FLOW STATIONARY SIPHON PIPE

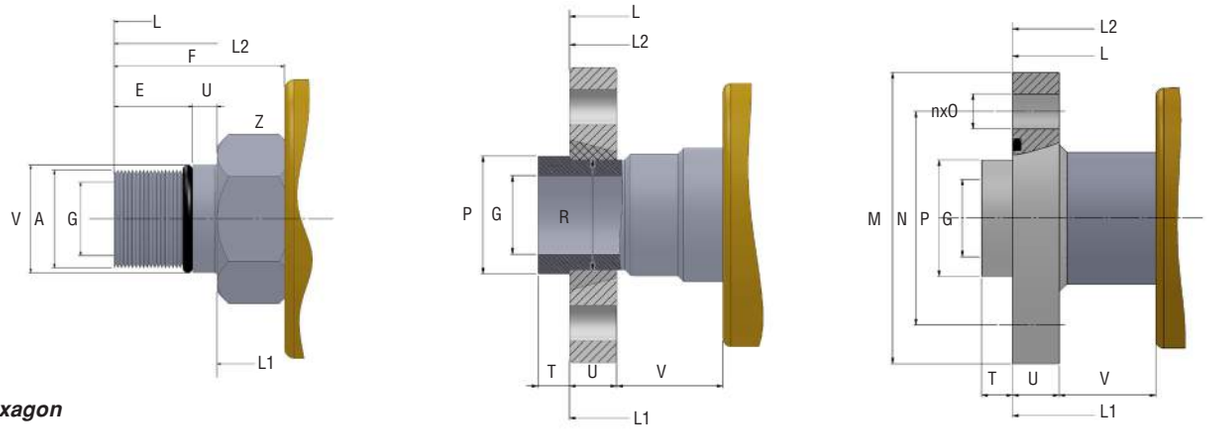

Z: hexagon

SHAFT SIZE			SEAL TYPE				B	C	K	J	D
			CARBON-SIC		SIC-SIC						
A		THREAD TYPE	STOCK CODE LH	STOCK CODE RH	STOCK CODE LH	STOCK CODE RH					
DN10	3/8"	3/8" BSPP	403-1121-303L	403-1121-303R	403-1321-303L	403-1321-303R	3/8" NPT	1/4" NPT	M6	1/4" NPT	45
		3/8" BSPP	403-3121-303L	403-3121-303R	403-3321-303L	403-3321-303R	3/8" BSPP	1/4" BSPP		1/4" BSPP	
DN15	1/2"	1/2" BSPP	405-1121-305L	405-1121-305R	405-1321-305L	405-1321-305R	1/2" NPT	3/8" NPT	1/8" BSPP	3/8" NPT	57
		1/2" BSPP	405-3121-305L	405-3121-305R	405-3321-305L	405-3321-305R	1/2" BSPP	3/8" BSPP		3/8" BSPP	
		PLOT M20x1.5	405-3121-520LP	405-3121-520RP	405-3321-520LP	405-3321-520RP					
		QR	405-3121-0010	405-3121-0010	405-3321-0010	405-3321-0010					
DN20	3/4"	3/4" BSPP	407-1121-307L	407-1121-307R	407-1321-307L	407-1321-307R	3/4" NPT	1/2" NPT	1/4" BSPP	1/2" NPT	67
		3/4" BSPP	407-3121-307L	407-3121-307R	407-3321-307L	407-3321-307R	3/4" BSPP	1/2" BSPP		1/2" BSPP	
		PLOT M27x1.5	407-3121-527LP	407-3121-527RP	407-3321-527LP	407-3321-527RP					
		M35x1.5	407-3121-535L	407-3121-535R	407-3321-535L	407-3321-535R					
		QR	407-3121-0010	407-3121-0010	407-3321-0010	407-3321-0010					
		FLANGED	407-3121-0020	407-3121-0020	407-3321-0020	407-3321-0020					
DN25	1"	1" BSPP	410-1121-310L	410-1121-310R	410-1321-310L	410-1321-310R	1" NPT	3/4" NPT	3/8" BSPP	1/2" NPT	75
		1" BSPP	410-3121-310L	410-3121-310R	410-3321-310L	410-3321-310R	1" BSPP	3/4" BSPP		1/2" BSPP	
		M35x1.5	410-3121-535L	410-3121-535R	410-3321-535L	410-3321-535R					
		QR	410-3121-0010	410-3121-0010	410-3321-0010	410-3321-0010					
		FLANGED	410-3121-0020	410-3121-0020	410-3321-0020	410-3321-0020					
DN32	1 1/4"	1 1/4" BSPP	412-1121-312L	412-1121-312R	412-1321-312L	412-1321-312R	1 1/4" NPT	1" NPT	1/2" BPSP	3/4" NPT	88
		1 1/4" BSPP	412-3121-312L	412-3121-312R	412-3321-312L	412-3321-312R	1 1/4" BSPP	1" BSPP		3/4" BSPP	
		QR	412-3121-0010	412-3121-0010	412-3321-0010	412-3321-0010					
		FLANGED	412-3121-0020	412-3121-0020	412-3321-0020	412-3321-0020					
DN40	1 1/2"	1 1/2" BSPP	415-1121-315L	415-1121-315R	415-1321-315L	415-1321-315R	1 1/2" NPT	1 1/4" NPT	3/4" BSPP	3/4" NPT	105
		1 1/2" BSPP	415-3121-315L	415-3121-315R	415-3321-315L	415-3321-315R	1 1/2" BSPP	1 1/4" BSPP		3/4" BSPP	
		M50x1.5	415-3121-550L	415-3121-550R	415-3321-550L	415-3321-550R					
		QR	415-3121-0010	415-3121-0010	415-3321-0010	415-3321-0010					
		FLANGED	415-3121-0020	415-3121-0020	415-3321-0020	415-3321-0020					
DN50	2"	2" BSPP	420-1121-320L	420-1121-320R	420-1321-320L	420-1321-320R	2" NPT	1 1/2" NPT	1" BSPP	1 1/4" NPT	115
		2" BSPP	420-3121-320L	420-3121-320R	420-3321-320L	420-3321-320R	2" BSPP	1 1/2" BSPP		1 1/4" BSPP	
		QR	420-3121-0010	420-3121-0010	420-3321-0010	420-3321-0010					
		FLANGED	420-3121-0020	420-3121-0020	420-3321-0020	420-3321-0020					

400 SERIES DUAL FLOW STATIONARY SIPHON PIPE

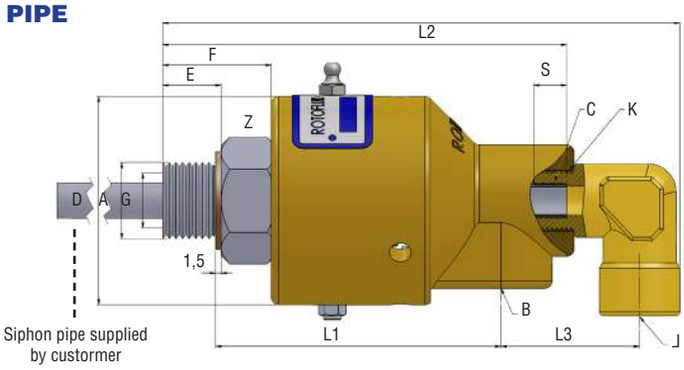

Dual flow joints are used when supply and return lines are connected to one side of the cylinder. Divided siphon pipes must be used when speed is higher than 1000 RPM and siphon pipe is longer than 4xL.

E	F	G	L	L1	L2	L3	M	N	nxO	P	R	S	T	U	V	Z	WEIGHT kg (lb)
12	24.5	10	109	65	90.5	25	-	-	-	-	-	8	-	-	-	22	0.85 (1.73)
16	30	15	142.5	78.5	110.75	38	-	-	-	-	-	9	-	-	-	30	1.45 (2.96)
16.5	34.75	15	147.25	78.5	115.5		-	-	-	-	-		-	5	22 g6	30	
-	-	15	148.5	99	117.25		-	-	-	24	22		6	11	25	-	
17	33.5	20	167	90.5	132	47.5	-	-	-	-	-	12	-	-	-	35	1.8 (3.67)
18	36.5	20	170	92	135		-	-	-	-	-		-	6	28 g6	35	
15	37.5	20	171	96.5	136		-	-	-	-	-		-	-	-	41	
-	-	20	172.5	111.5	138		-	-	-	30	28		8	14	25	-	
-	-	20	170.5	109.5	136		75	55	4xØ9	30	-		8	12	25		2.4 (4.90)
20	39.5	25	192	104.5	151.5	51.5	-	-	-	-	-	12	-	-	-	41	2.75 (5.61)
							-	-	-	-	-		-	-	-		
-	-		191.25	122	150.75		-	-	-	35	33		8	14	24.75	-	
			190.5	121	149.75		80	60	4xØ9	35	-		8	12	25.75		3.45 (7.04)
26	53	32	234.5	131.5	188	61	-	-	-	-	-	12	-	-	-	50	3.8 (7.76)
-	-		225.5	147	178.75		-	-	-	45	43		8	14	30	-	
			223.5	145	177		100	75	4xØ11	45			8	12	30		4.8 (9.80)
28	56	40	264	139.5	210	75	-	-	-	-	-	18	-	-	-	60	5.5 (11.22)
							-	-	-	-	-		-	-	-		
-	-		255	157	201		-	-	-	50	48		10	17	30	-	
			253	155	197.5		105	80	4xØ11	50	-		10	15	30		6.5 (13.27)
30	62	50	294	159.5	237	81.5	-	-	-	-	-	18	-	-	-	70	8.2 (16.73)
-	-		279	173	222		-	-	-	65	63		10	17	30	-	
			277	171	220		130	100	4xØ11	65	-		10	15	30		9.7 (19.8)

400 SERIES DUAL FLOW ROTARY SIPHON PIPE

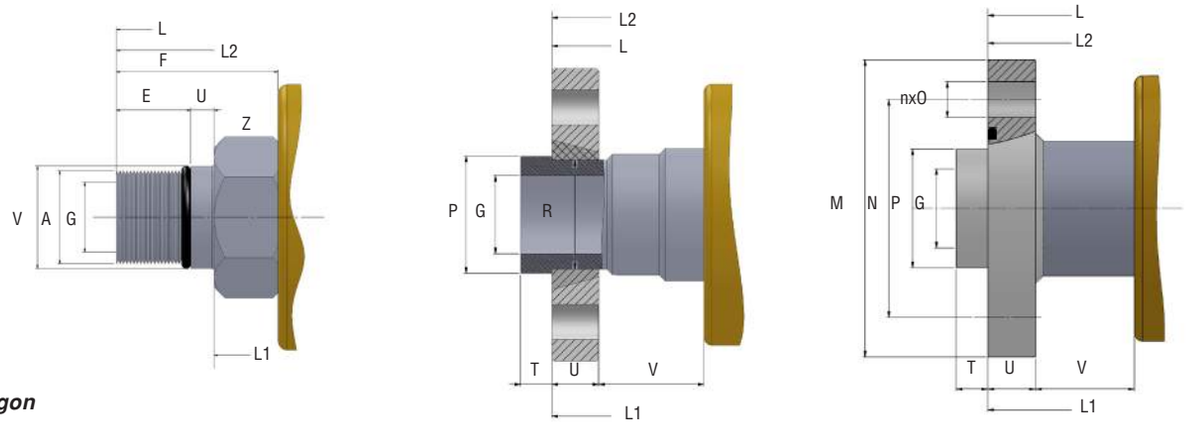

Z: hexagon

SHAFT SIZE			SEAL TYPE				B	C	K	J	D
			CARBON-SIC		SIC-SIC						
A		THREAD TYPE	STOCK CODE LH	STOCK CODE RH	STOCK CODE LH	STOCK CODE RH					
DN10	3/8"	3/8" BSPP	403-1121-303L	403-1121-303R	403-1321-303L	403-1321-303R	3/8" NPT	1/4" NPT	Q5.8	1/4" NPT	45
		3/8" BSPP	403-3121-303L	403-3121-303R	403-3321-303L	403-3321-303R	3/8" BSPP	1/4" BSPP		1/4" BSPP	
DN15	1/2"	1/2" BSPP	405-1121-305L	405-1121-305R	405-1321-305L	405-1321-305R	1/2" NPT	3/8" NPT	Q9.8	3/8" NPT	57
		1/2" BSPP	405-3121-305L	405-3121-305R	405-3321-305L	405-3321-305R	1/2" BSPP	3/8" BSPP		3/8" BSPP	
		PLOT M20x1.5	405-3121-520LP	405-3121-520RP	405-3321-520LP	405-3321-520RP					
		QR	405-3121-0010	405-3121-0010	405-3321-0010	405-3321-0010					
DN20	3/4"	3/4" BSPP	407-1121-307L	407-1121-307R	407-1321-307L	407-1321-307R	3/4" NPT	1/2" NPT	Q12.8	1/2" NPT	67
		3/4" BSPP	407-3121-307L	407-3121-307R	407-3321-307L	407-3321-307R	3/4" BSPP	1/2" BSPP		1/2" BSPP	
		PLOT M27x1.5	407-3121-527LP	407-3121-527RP	407-3321-527LP	407-3321-527RP					
		M35x1.5	407-3121-535L	407-3121-535R	407-3321-535L	407-3321-535R					
		QR	407-3121-0010	407-3121-0010	407-3321-0010	407-3321-0010					
		FLANGED	407-3121-0020	407-3121-0020	407-3321-0020	407-3321-0020					
DN25	1"	1" BSPP	410-1121-310L	410-1121-310R	410-1321-310L	410-1321-310R	1" NPT	3/4" NPT	Q15.8	1/2" NPT	75
		1" BSPP	410-3121-310L	410-3121-310R	410-3321-310L	410-3321-310R	1" BSPP	3/4" BSPP		1/2" BSPP	
		M35x1.5	410-3121-535L	410-3121-535R	410-3321-535L	410-3321-535R					
		QR	410-3121-0010	410-3121-0010	410-3321-0010	410-3321-0010					
		FLANGED	410-3121-0020	410-3121-0020	410-3321-0020	410-3321-0020					
DN32	1 1/4"	1 1/4" BSPP	412-1121-312L	412-1121-312R	412-1321-312L	412-1321-312R	1 1/4" NPT	1" NPT	Q21.8	3/4" NPT	88
		1 1/4" BSPP	412-3121-312L	412-3121-312R	412-3321-312L	412-3321-312R	1 1/4" BSPP	1" BSPP		3/4" BSPP	
		QR	412-3121-0010	412-3121-0010	412-3321-0010	412-3321-0010					
		FLANGED	412-3121-0020	412-3121-0020	412-3321-0020	412-3321-0020					
DN40	1 1/2"	1 1/2" BSPP	415-1121-315L	415-1121-315R	415-1321-315L	415-1321-315R	1 1/2" NPT	1 1/4" NPT	Q25.8	3/4" NPT	105
		1 1/2" BSPP	415-3121-315L	415-3121-315R	415-3321-315L	415-3321-315R	1 1/2" BSPP	1 1/4" BSPP		3/4" BSPP	
		M50x1.5	415-3121-550L	415-3121-550R	415-3321-550L	415-3321-550R					
		QR	415-3121-0010	415-3121-0010	415-3321-0010	415-3321-0010					
		FLANGED	415-3121-0020	415-3121-0020	415-3321-0020	415-3321-0020					
DN50	2"	2" BSPP	420-1121-320L	420-1121-320R	420-1321-320L	420-1321-320R	2" NPT	1 1/2" NPT	Q32.1	1 1/4" NPT	115
		2" BSPP	420-3121-320L	420-3121-320R	420-3321-320L	420-3321-320R	2" BSPP	1 1/2" BSPP		1 1/4" BSPP	
		QR	420-3121-0010	420-3121-0010	420-3321-0010	420-3321-0010					
		FLANGED	420-3121-0020	420-3121-0020	420-3321-0020	420-3321-0020					

400 SERIES DUAL FLOW ROTARY SIPHON PIPE

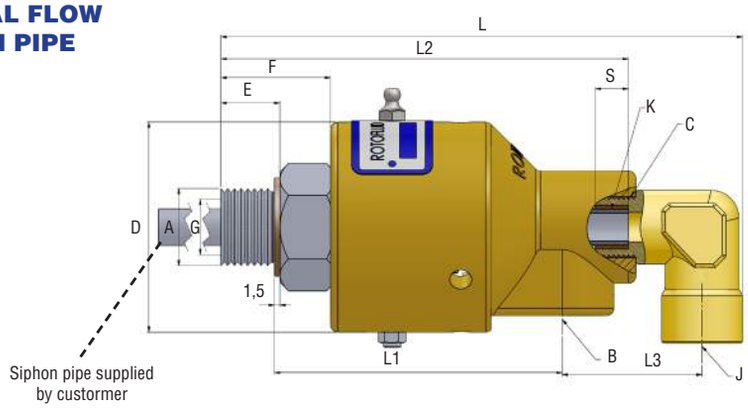

Dual flow joints are used when supply and return lines are connected to one side of the cylinder. Divided siphon pipes must be used when speed is higher than 1000 RPM and siphon pipe is longer than 4xL.

E	F	G	L	L1	L2	L3	M	N	nxO	P	R	S	T	U	V	Z	WEIGHT kg (lb)
12	24.5	10	111.5	65	93	27.5	-	-	-	-	-	8	-	-	-	22	0.85 (1.73)
16	30	15	144	78.5	113	40	-	-	-	-	-	9	-	-	-	30	1.45 (2.96)
16.5	34.75	15	149	77	118		-	-	-	-	-		-	5	22g6	30	
-	-	15	150	99	119		-	-	-	24	22		6	11	25	-	
17	33.5	20	169	90.5	132	49.5	-	-	-	-	-	10.5	-	-	-	35	1.8 (3.67)
15	37.5	20	171	89	134		-	-	-	-	-		-	6	28g6	35	
15	37.5	20	171	96.5	134		-	-	-	-	-		-	-	-	41	
-	-	20	174.5	111.5	137.5		-	-	-	30	28		8	14	25	-	
		20	172.5	109.5	135.5		75	55	4xØ9	30	-		8	12	25		2.4 (4.90)
20	39.5	25	190	104.5	151.5	51.5	-	-	-	-	-	10.5	-	-	-	41	2.75 (5.61)
							-	-	-	-	-		-	-	-		
-	-		189.25	122	150.75		-	-	-	35	33		8	14	24.75	-	
			188.5	121	149.75		80	60	4xØ9	35	-		8	12	25.75		3.45 (7.04)
26	53	32	236	131.5	189.5	62.5	-	-	-	-	-	12	-	-	-	50	3.8 (7.76)
-	-		227	147	180.5		-	-	-	45	43		8	14	30	-	
			225	145	178.5		100	75	4xØ11	45			8	12	30		4.8 (9.80)
28	56	40	264	139.5	209	76.5	-	-	-	-	-	17	-	-	-	60	5.5 (11.22)
							-	-	-	-	-		-	-	-		
-	-		255	157	200		-	-	-	50	48		10	17	30	-	
			253	155	198		105	80	4xØ11	50	-		10	15	30		6.5 (13.27)
30	62	50	295.5	159.5	237	81.5	-	-	-	-	-	17	-	-	-	70	8.2 (16.73)
-	-		280.5	173	222		-	-	-	65	63		10	17	30	-	
			278.5	171	220		130	100	4xØ11	65	-		10	15	30		9.7 (19.8)

400A SERIES

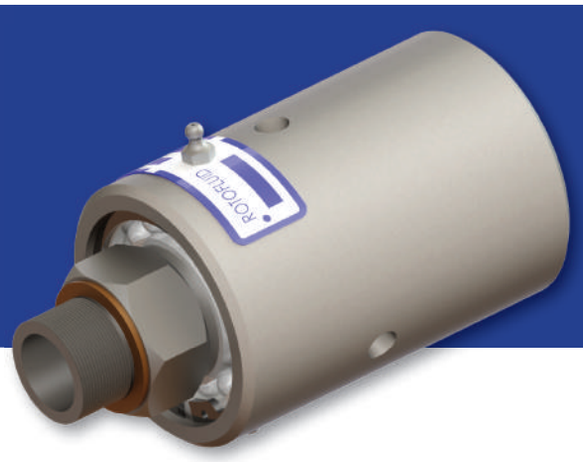

ALL IN STAINLESS STEEL
For GENERAL PURPOSES, WATER, CHEMICALS
1/4" (DN08) - 2" (DN50)

- Single and dual flow design
- Self supported rotating joint
- Radial housing connection
- Balanced mechanical seals
- Easy and quick replacement of mechanical seals
- Vent holes on housing

Special Options

- Threaded vent holes with plugs

Application Parameters

Max. Pressure		: 50 bar	750psi
Max. Temperature		: 160°C	320 °F
Max. Speed	(1/4" - 3/4")	: 3500 RPM	3500 min^{-1}
	(1")	: 3000 RPM	3000 min^{-1}
	(1 1/4" - 1 1/2")	: 2500 RPM	2500 min^{-1}
	(2")	: 750 RPM	750 min^{-1}

Avoid working with max. speed at max. pressure

For further information, please consult FACTORY, or your local representative

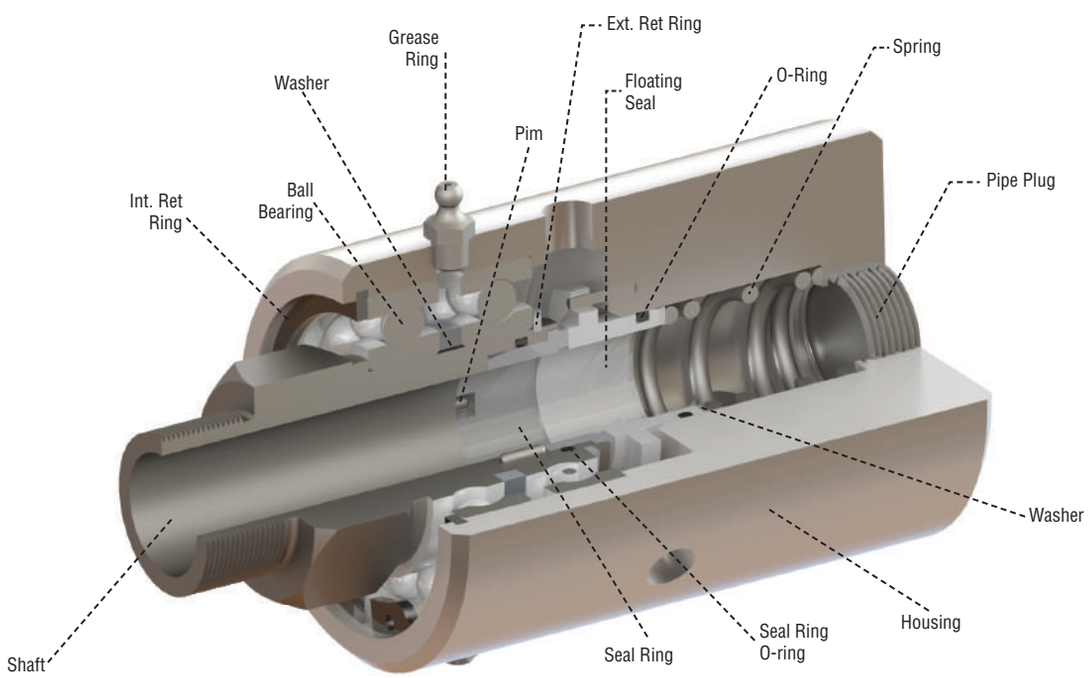

400A SERIES
SINGLE FLOW

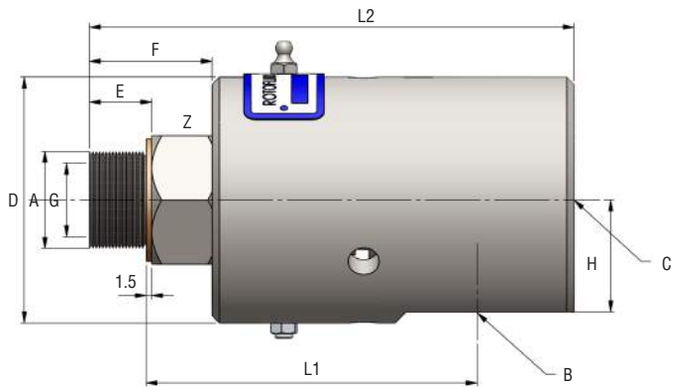

Z: hexagon

Single flow joints are used when supply and return lines are connected to opposite sides of the cylinder.

SHAFT SIZE			SEAL TYPE		B	C	D	E	F	G	L	L1	Z	WEIGHT kg (lb)
A		THREAD TYPE	CARBON-SIC STOCK CODE	SIC-SIC STOCK CODE										
DN08	1/4"	1/4" BSPP RH	402-4121-302R	402-4321-302R	1/4" NPT	1/8" NPT	45	12	24.5	8	91.5	65	22	1 (2.04)
		1/4" BSPP LH	402-4121-302L	402-4321-302L										
		1/4" BSPP RH	402-6121-302R	402-6321-302R	1/4" BSPP	1/8" BSPP								
		1/4" BSPP LH	402-6121-302L	402-6321-302L										
DN10	3/8"	3/8" BSPP RH	403-4121-303R	403-4321-303R	3/8" NPT	1/4" NPT	45	12	24.5	9	91.5	66	22	1 (2.04)
		3/8" BSPP LH	403-4121-303L	403-4321-303L										
		3/8" BSPP RH	403-6121-303R	403-6321-303R	3/8" BSPP	1/4" BSPP								
		3/8" BSPP LH	403-6121-303L	403-6321-303L										
DN15	1/2"	1/2" BSPP RH	405-4121-305R	405-4321-305R	1/2" NPT	3/8" NPT	58	16	30	15	116	79.5	30	1.4 (2.86)
		1/2" BSPP LH	405-4121-305L	405-4321-305L										
		1/2" BSPP RH	405-6121-305R	405-6321-305R	1/2" BSPP	3/8" BSPP								
		1/2" BSPP LH	405-6121-305L	405-6321-305L										
DN20	3/4"	3/4" BSPP RH	407-4121-307R	407-4321-307R	3/4" NPT	1/2" NPT	67	17	33.5	20	132.5	90.5	35	1.8 (3.67)
		3/4" BSPP LH	407-4121-307L	407-4321-307L										
		3/4" BSPP RH	407-6121-307R	407-6321-307R	3/4" BSPP	1/2" BSPP								
		3/4" BSPP LH	407-6121-307L	407-6321-307L										
DN25	1"	1" BSPP RH	410-4121-310R	410-4321-310R	1" NPT	3/4" NPT	75	20	39.5	25	151.5	104.5	41	2.75 (5.61)
		1" BSPP LH	410-4121-310L	410-4321-310L										
		1" BSPP RH	410-6121-310R	410-6321-310R	1" BSPP	3/4" BSPP								
		1" BSPP LH	410-6121-310L	410-6321-310L										
DN32	1 1/4"	1 1/4" BSPP RH	412-4121-312R	412-4321-312R	1 1/4" NPT	1" NPT	88	26	53	32	190	131.5	50	3.75 (7.65)
		1 1/4" BSPP LH	412-4121-312L	412-4321-312L										
		1 1/4" BSPP RH	412-6121-312R	412-6321-312R	1 1/4" BSPP	1" BSPP								
		1 1/4" BSPP LH	412-6121-312L	412-6321-312L										
DN40	1 1/2"	1 1/2" BSPP RH	415-4121-315R	415-4321-315R	1 1/2" NPT	1 1/4" NPT	105	28	56	40	206.5	139.5	60	5.25 (10.71)
		1 1/2" BSPP LH	415-4121-315L	415-4321-315L										
		1 1/2" BSPP RH	415-6121-315R	415-6321-315R	1 1/2" BSPP	1 1/4" BSPP								
		1 1/2" BSPP LH	415-6121-315L	415-6321-315L										
DN50	2"	2" BSPP RH	420-4121-320R	420-4321-320R	2" NPT	1 1/2" NPT	115	30	62	50	238	159.5	70	7.75 (15.82)
		2" BSPP LH	420-4121-320L	420-4321-320L										
		2" BSPP RH	420-6121-320R	420-6321-320R	2" BSPP	1 1/2" BSPP								
		2" BSPP LH	420-6121-320L	420-6321-320L										

400A SERIES DUAL FLOW STATIONARY SIPHON PIPE

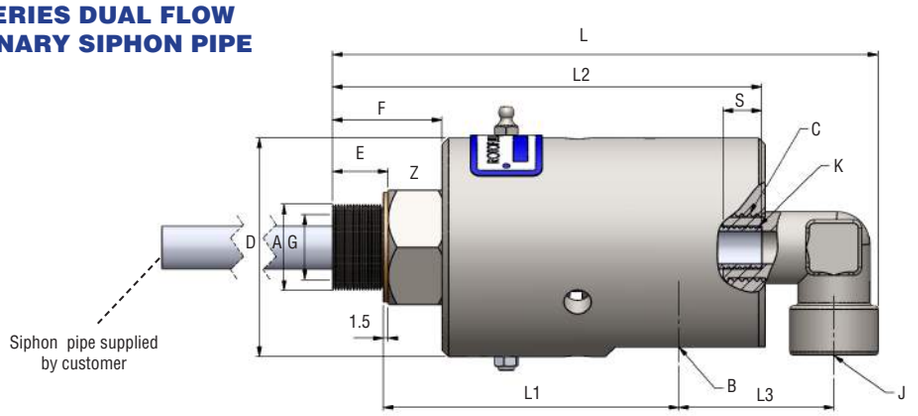

Z: hexagon

Dual flow joints are used when supply and return lines are connected to one side of the cylinder. Divided siphon pipes must be used when speed is higher than 1000 RPM and siphon pipe is longer than 4xL.

SHAFT SIZE			SEAL TYPE		B	C	K	J	D	E	F	G	L	L1	L2	L3	S	Z	WEIGHT kg (lb)
A		THREAD TYPE	CARBON-SIC STOCK CODE	SIC-SIC STOCK CODE															
DN10	3/8"	3/8" BSPP RH	403-4121-303R	403-4321-303R	3/8" NPT	1/4" NPT	M6	1/4" NPT	45	12	24.5	9	110.5	66	92	27.5	8	22	1.15 (2.35)
		3/8" BSPP LH	403-4121-303L	403-4321-303L															
		3/8" BSPP RH	403-6121-303R	403-6321-303R	3/8" BSPP	1/4" BSPP		1/4" BSPP											
		3/8" BSPP LH	403-6121-303L	403-6321-303L															
DN15	1/2"	1/2" BSPP RH	405-4121-305R	405-4321-305R	1/2" NPT	3/8" NPT	1/8" BSPP	3/8" NPT	58	16	30	15	146	79.5	115	40	9	30	1.55 (3.16)
		1/2" BSPP LH	405-4121-305L	405-4321-305L															
		1/2" BSPP RH	405-6121-305R	405-6321-305R	1/2" BSPP	3/8" BSPP		3/8" BSPP											
		1/2" BSPP LH	405-6121-305L	405-6321-305L															
DN20	3/4"	3/4" BSPP RH	407-4121-307R	407-4321-307R	3/4" NPT	1/2" NPT	1/4" BSPP	1/2" NPT	67	17	33.5	20	167	90.5	131.5	49.5	12	35	2 (4.08)
		3/4" BSPP LH	407-4121-307L	407-4321-307L															
		3/4" BSPP RH	407-6121-307R	407-6321-307R	3/4" BSPP	1/2" BSPP		1/2" BSPP											
		3/4" BSPP LH	407-6121-307L	407-6321-307L															
DN25	1"	1" BSPP RH	410-4121-310R	410-4321-310R	1" NPT	3/4" NPT	3/8" BSPP	1/2" NPT	75	20	39.5	25	190.5	104.5	153.5	51.5	12	41	3 (6.12)
		1" BSPP LH	410-4121-310L	410-4321-310L															
		1" BSPP RH	410-6121-310R	410-6321-310R	1" BSPP	3/4" BSPP		1/2" BSPP											
		1" BSPP LH	410-6121-310L	410-6321-310L															
DN32	1 1/4"	1 1/4" BSPP RH	412-4121-312R	412-4321-312R	1 1/4" NPT	1" NPT	1/2" BSPP	3/4" NPT	88	26	53	32	236.5	131.5	190	62.5	12	50	4.05 (8.27)
		1 1/4" BSPP LH	412-4121-312L	412-4321-312L															
		1 1/4" BSPP RH	412-6121-312R	412-6321-312R	1 1/4" BSPP	1" BSPP		3/4" BSPP											
		1 1/4" BSPP LH	412-6121-312L	412-6321-312L															
DN40	1 1/2"	1 1/2" BSPP RH	415-4121-315R	415-4321-315R	1 1/2" NPT	1 1/4" NPT	3/4" BSPP	3/4" NPT	105	28	56	40	264	139.5	210.5	76.5	18	60	5.75 (11.73)
		1 1/2" BSPP LH	415-4121-315L	415-4321-315L															
		1 1/2" BSPP RH	415-6121-315R	415-6321-315R	1 1/2" BSPP	1 1/4" BSPP		3/4" BSPP											
		1 1/2" BSPP LH	415-6121-315L	415-6321-315L															
DN50	2"	2" BSPP RH	420-4121-320R	420-4321-320R	2" NPT	1 1/2" NPT	1" BSPP	1 1/4" NPT	115	30	62	50	296	159.5	239	83	18	70	8.45 (17.24)
		2" BSPP LH	420-4121-320L	420-4321-320L															
		2" BSPP RH	420-6121-320R	420-6321-320R	2" BSPP	1 1/2" BSPP		1 1/4" BSPP											
		2" BSPP LH	420-6121-320L	420-6321-320L															

400 SERIES DUAL FLOW ROTARY SIPHON PIDE

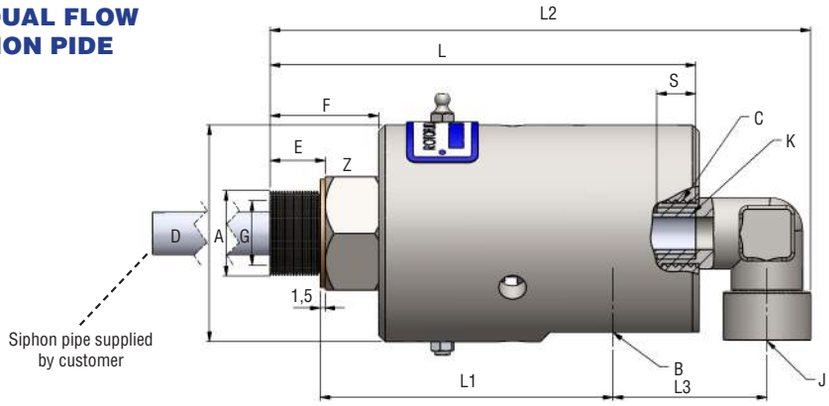

Dual flow joints are used when supply and return lines are connected to one side of the cylinder. Divided siphon pipes must be used when speed is higher than 1000 RPM and siphon pipe is longer than 4xL.

Z: hexagon

SHAFT SIZE			SEAL TYPE		B	C	K	J	D	E	F	G	L	L1	L2	L3	S	Z	WEIGHT kg (lb)
A		THREAD TYPE	CARBON-SIC STOCK CODE	SIC-SIC STOCK CODE															
DN10	3/8"	3/8" BSPP RH	403-4121-303R	403-4321-303R	3/8" NPT	1/4" NPT	Q5.8	1/4" NPT	45	12	24.5	9	110.5	66	92	27.5	8	22	1.15 (2.35)
		3/8" BSPP LH	403-4121-303L	403-4321-303L															
		3/8" BSPP RH	403-6121-303R	403-6321-303R	3/8" BSPP	1/4" BSPP		1/4" BSPP											
		3/8" BSPP LH	403-6121-303L	403-6321-303L															
DN15	1/2"	1/2" BSPP RH	405-4121-305R	405-4321-305R	1/2" NPT	3/8" NPT	Q9.8	3/8" NPT	58	16	30	15	146	79.5	115	40	9	30	1.55 (3.16)
		1/2" BSPP LH	405-4121-305L	405-4321-305L															
		1/2" BSPP RH	405-6121-305R	405-6321-305R	1/2" BSPP	3/8" BSPP		3/8" BSPP											
		1/2" BSPP LH	405-6121-305L	405-6321-305L															
DN20	3/4"	3/4" BSPP RH	407-4121-307R	407-4321-307R	3/4" NPT	1/2" NPT	Q12.8	1/2" NPT	67	17	33.5	20	167	90.5	131.5	49.5	12	35	2 (4.08)
		3/4" BSPP LH	407-4121-307L	407-4321-307L															
		3/4" BSPP RH	407-6121-307R	407-6321-307R	3/4" BSPP	1/2" BSPP		1/2" BSPP											
		3/4" BSPP LH	407-6121-307L	407-6321-307L															
DN25	1"	1" BSPP RH	410-4121-310R	410-4321-310R	1" NPT	3/4" NPT	Q15.8	1/2" NPT	75	20	39.5	25	190.5	104.5	153.5	51.5	12	41	3 (6.12)
		1" BSPP LH	410-4121-310L	410-4321-310L															
		1" BSPP RH	410-6121-310R	410-6321-310R	1" BSPP	3/4" BSPP		1/2" BSPP											
		1" BSPP LH	410-6121-310L	410-6321-310L															
DN32	1 1/4"	1 1/4" BSPP RH	412-4121-312R	412-4321-332R	1 1/4" NPT	1" NPT	Q21.8	3/4" NPT	88	26	53	32	236.5	131.5	190	62.5	12	50	4.05 (8.27)
		1 1/4" BSPP LH	412-4121-312L	412-4321-332L															
		1 1/4" BSPP RH	412-6121-312R	412-6321-332R	1 1/4" BSPP	1" BSPP		3/4" BSPP											
		1 1/4" BSPP LH	412-6121-312L	412-6321-332L															
DN40	1 1/2"	1 1/2" BSPP RH	415-4121-315R	415-4321-315R	1 1/2" NPT	1 1/4" NPT	Q25.8	3/4" NPT	105	28	56	40	264	139.5	210.5	76.5	17	60	5.75 (11.73)
		1 1/2" BSPP LH	415-4121-315L	415-4321-315L															
		1 1/2" BSPP RH	415-6121-315R	415-6321-315R	1 1/2" BSPP	1 1/4" BSPP		3/4" BSPP											
		1 1/2" BSPP LH	415-6121-315L	415-6321-315L															
DN50	2"	2" BSPP RH	420-4121-320R	420-4321-320R	2" NPT	1 1/2" NPT	Q32.1	1 1/4" NPT	115	30	62	50	296	159.5	239	83	18	70	8.45 (17.24)
		2" BSPP LH	420-4121-320L	420-4321-320L															
		2" BSPP RH	420-6121-320R	420-6321-320R	2" BSPP	1 1/2" BSPP		1 1/4" BSPP											
		2" BSPP LH	420-6121-320L	420-6321-320L															

400B SERIES

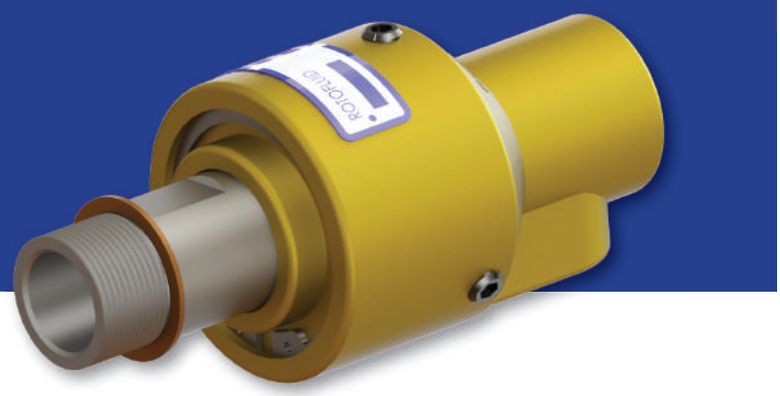

For GENERAL PURPOSES
For WATER,
1/4" (DN08) – 2"(DN50)

- Single flow and dual flow design
- Self supported rotating joint
- Radial housing connection
- Balanced mechanical seals
- Easy and quick replacement of sealing elements
- Forged brass housing
- Stainless steel internal parts
- Composite bearing

Application Parameters

Max. Pressure	: 50 bar	750psi
Max. Temperature	: 160°C	320°F
Max. Speed	: 100 RPM	100 RPM

Avoid working with max. speed at max. pressure

For further information, please consult FACTORY, or your local representative

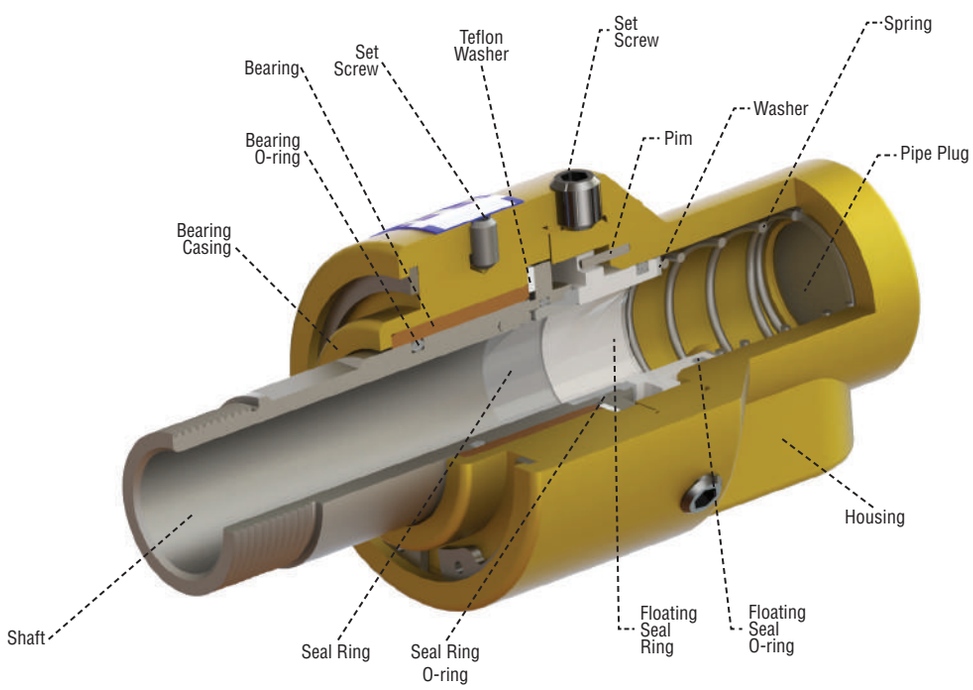

400B SERIES
SINGLE FLOW

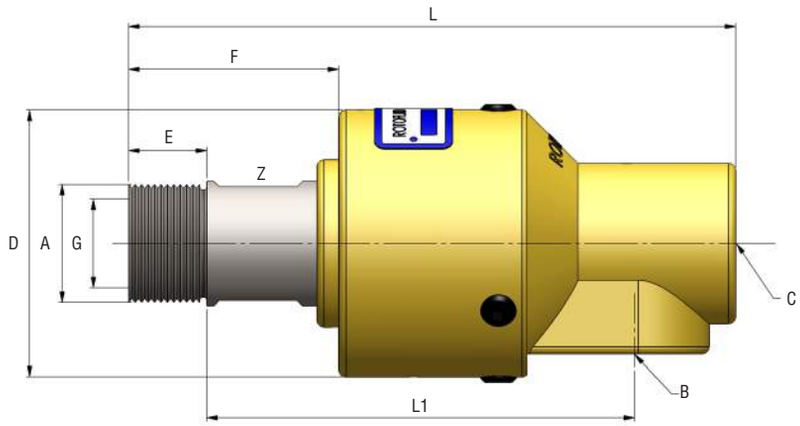

Z: 2x Wrench Flats

Single flow joints are used when supply and return lines are connected to opposite sides of the cylinder.

SHAFT SIZE			SEAL TYPE		B	C	D	E	F	G	L1	L	Z	WEIGHT (kg)
A		THREAD TYPE	CARBON-SIC STOCK CODE	SIC-SIC STOCK CODE										
DN08	1/4"	1/4" BSPP RH	402-1121-302RB	402-1321-302RB	1/4" NPT	1/8" NPT	45	14	39	8	76	106	16	0.7 (1.43)
		1/4" BSPP LH	402-1121-302LB	402-1321-302LB										
		1/4" BSPP RH	402-3121-302RB	402-3321-302RB	1/4" BSPP	1/8" BSPP								
		1/4" BSPP LH	402-3121-302LB	402-3321-302LB										
DN10	3/8"	3/8" BSPP RH	403-1121-303RB	403-1321-303RB	3/8" NPT	1/4" NPT	45	14	39.5	9	76.5	106.5	16	0.7 (1.43)
		3/8" BSPP LH	403-1121-303LB	403-1321-303LB										
		3/8" BSPP RH	403-3121-303RB	403-3321-303RB	3/8" BSPP	1/4" BSPP								
		3/8" BSPP LH	403-3121-303LB	403-3321-303LB										
DN15	1/2"	1/2" BSPP RH	405-1121-305RB	405-1321-305RB	1/2" NPT	3/8" NPT	57	16	45.5	15	92.5	128	22	1.3 (2.65)
		1/2" BSPP LH	405-1121-305LB	405-1321-305LB										
		1/2" BSPP RH	405-3121-305RB	405-3321-305RB	1/2" BSPP	3/8" BSPP								
		1/2" BSPP LH	405-3121-305LB	405-3321-305LB										
DN20	3/4"	3/4" BSPP RH	407-1121-307RB	407-1321-307RB	3/4" NPT	1/2" NPT	67	18	53	20	107.5	152	28	1.6 (3.27)
		3/4" BSPP LH	407-1121-307LB	407-1321-307LB										
		3/4" BSPP RH	407-3121-307RB	407-3321-307RB	3/4" BSPP	1/2" BSPP								
		3/4" BSPP LH	407-3121-307LB	407-3321-307LB										
DN25	1"	1" BSPP RH	410-1121-310RB	410-1321-310RB	1" NPT	3/4" NPT	75	22	59	25	120.5	171	32	2.5 (5.10)
		1" BSPP LH	410-1121-310LB	410-1321-310LB										
		1" BSPP RH	410-3121-310RB	410-3321-310RB	1" BSPP	3/4" BSPP								
		1" BSPP LH	410-3121-310LB	410-3321-310LB										
DN32	1 1/4"	1 1/4" BSPP RH	412-1121-312RB	412-1321-312RB	1 1/4" NPT	1" NPT	88	26	60	32	137	197	42	3.5 (7.14)
		1 1/4" BSPP LH	412-1121-312LB	412-1321-312LB										
		1 1/4" BSPP RH	412-3121-312RB	412-3321-312RB	1 1/4" BSPP	1" BSPP								
		1 1/4" BSPP LH	412-3121-312LB	412-3321-312LB										
DN40	1 1/2"	1 1/2" BSPP RH	415-1121-315RB	415-1321-315RB	1 1/2" NPT	1 1/4" NPT	105	28	69.5	40	151.5	220	52	5 (10.20)
		1 1/2" BSPP LH	415-1121-315LB	415-1321-315LB										
		1 1/2" BSPP RH	415-3121-315RB	415-3321-315RB	1 1/2" BSPP	1 1/4" BSPP								
		1 1/2" BSPP LH	415-3121-315LB	415-3321-315LB										
DN50	2"	2" BSPP RH	420-1121-320RB	420-1321-320RB	2" NPT	1 1/2" NPT	115	28	80	50	178	256	62	7.5 (15.31)
		2" BSPP LH	420-1121-320LB	420-1321-320LB										
		2" BSPP RH	420-3121-320RB	420-3321-320RB	2" BSPP	1 1/2" BSPP								
		2" BSPP LH	420-3121-320LB	420-3321-320LB										

400B SERIES DUAL FLOW STATIONARY SIPHON PIPE

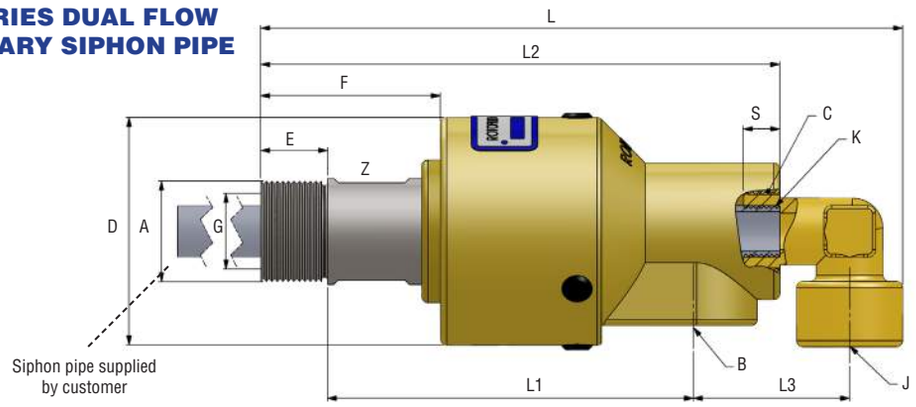

Dual flow joints are used when supply and return lines are connected to one side of the cylinder.
Z: 2x Wrench Flats *Divided siphon pipes must be used when speed is higher than 1000 RPM and siphon pipe is longer than 4xL.*

SHAFT SIZE			SEAL TYPE		B	C	K	J	D	E	F	G	L	L1	L2	L3	S	Z	WEIGHT (kg)
A		THREAD TYPE	CARBON-SIC STOCK CODE	SIC-SIC STOCK CODE															
DN10	3/8"	3/8" BSPP RH	403-1121-303RB	403-1321-303RB	3/8" NPT	1/4" NPT	M6	1/4" NPT	45	14	39.5	9	126	76.5	107.5	27.5	8	16	0.85 (1.73)
		3/8" BSPP LH	403-1121-303LB	403-1321-303LB															
		3/8" BSPP RH	403-3121-303RB	403-3321-303RB	3/8" BSPP	1/4" BSPP		1/4" BSPP											
		3/8" BSPP LH	403-3121-303LB	403-3321-303LB															
DN15	1/2"	1/2" BSPP RH	405-1121-305RB	405-1321-305RB	1/2" NPT	3/8" NPT	1/8" BSPP	3/8" NPT	57	16	45.5	15	159.5	92.5	128.5	40	9	22	1.45 (2.96)
		1/2" BSPP LH	405-1121-305LB	405-1321-305LB															
		1/2" BSPP RH	405-3121-305RB	405-3321-305RB	1/2" BSPP	3/8" BSPP		3/8" BSPP											
		1/2" BSPP LH	405-3121-305LB	405-3321-305LB															
DN20	3/4"	3/4" BSPP RH	407-1121-307RB	407-1321-307RB	3/4" NPT	1/2" NPT	1/4" BSPP	1/2" NPT	67	18	53	20	188.5	107.5	150	49.5	12	28	1.8 (3.67)
		3/4" BSPP LH	407-1121-307LB	407-1321-307LB															
		3/4" BSPP RH	407-3121-307RB	407-3321-307RB	3/4" BSPP	1/2" BSPP		1/2" BSPP											
		3/4" BSPP LH	407-3121-307LB	407-3321-307LB															
DN25	1"	1" BSPP RH	410-1121-310RB	410-1321-310RB	1" NPT	3/4" NPT	3/8" BSPP	1/2" NPT	75	22	59	25	209.5	120.5	169	51.5	12	32	2.75 (5.61)
		1" BSPP LH	410-1121-310LB	410-1321-310LB															
		1" BSPP RH	410-3121-310RB	410-3321-310RB	1" BSPP	3/4" BSPP		1/2" BSPP											
		1" BSPP LH	410-3121-310LB	410-3321-310LB															
DN32	1 1/4"	1 1/4" BSPP RH	412-1121-312RB	412-1321-312RB	1 1/4" NPT	1" NPT	1/2" BSPP	3/4" NPT	88	26	60	32	243	137	196.5	62.5	12	42	3.8 (7.76)
		1 1/4" BSPP LH	412-1121-312LB	412-1321-312LB															
		1 1/4" BSPP RH	412-3121-312RB	412-3321-312RB	1 1/4" BSPP	1" BSPP		3/4" BSPP											
		1 1/4" BSPP LH	412-3121-312LB	412-3321-312LB															
DN40	1 1/2"	1 1/2" BSPP RH	415-1121-315RB	415-1321-315RB	1 1/2" NPT	1 1/4" NPT	3/4" BSPP	3/4" NPT	105	28	69.5	40	277.5	151.5	221.5	76.5	18	52	5.5 (11.22)
		1 1/2" BSPP LH	415-1121-315LB	415-1321-315LB															
		1 1/2" BSPP RH	415-3121-315RB	415-3321-315RB	1 1/2" BSPP	1 1/4" BSPP		3/4" BSPP											
		1 1/2" BSPP LH	415-3121-315LB	415-3321-315LB															
DN50	2"	2" BSPP RH	420-1121-320RB	420-1321-320RB	2" NPT	1 1/2" NPT	1" BSPP	1 1/4" NPT	115	28	80	50	313.5	178	254	83	18	62	8.2 (16.73)
		2" BSPP LH	420-1121-320LB	420-1321-320LB															
		2" BSPP RH	420-3121-320RB	420-3321-320RB	2" BSPP	1 1/2" BSPP		1 1/4" BSPP											
		2" BSPP LH	420-3121-320LB	420-3321-320LB															

400B SERIES DUAL FLOW ROTARY SIPHON PIPE

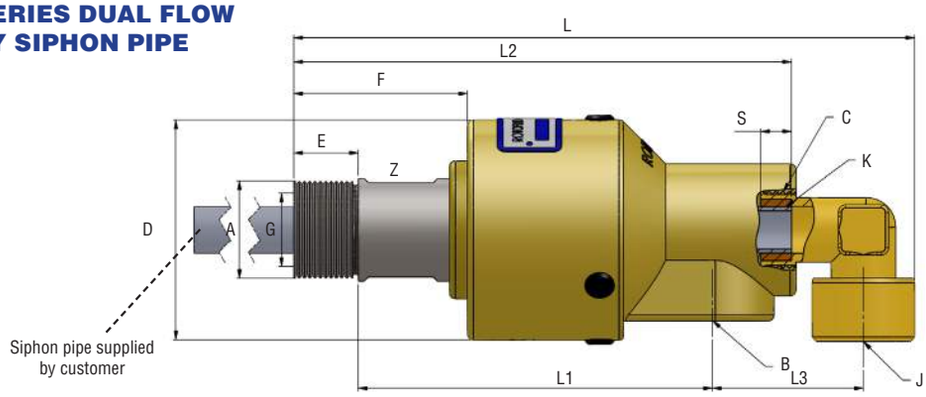

Dual flow joints are used when supply and return lines are connected to one side of the cylinder.
Divided siphon pipes must be used when speed is higher than 1000 RPM and siphon pipe is longer than 4xL.

Z: 2x Wrench Flats

SHAFT SIZE			SEAL TYPE		B	C	K	J	D	E	F	G	L	L1	L2	L3	S	Z	WEIGHT (kg)
A		THREAD TYPE	CARBON-SIC STOCK CODE	SIC-SIC STOCK CODE															
DN10	3/8"	3/8" BSPP RH	403-1121-303RB	403-1321-303RB	3/8" NPT	1/4" NPT	Q5.8	1/4" NPT	45	14	39.5	9	126	76.5	107.5	27.5	8	16	0.85 (1.73)
		3/8" BSPP LH	403-1121-303LB	403-1321-303LB															
		3/8" BSPP RH	403-3121-303RB	403-3321-303RB	3/8" BSPP	1/4" BSPP		1/4" BSPP											
		3/8" BSPP LH	403-3121-303LB	403-3321-303LB															
DN15	1/2"	1/2" BSPP RH	405-1121-305RB	405-1321-305RB	1/2" NPT	3/8" NPT	Q9.8	3/8" NPT	57	16	45.5	15	159.5	92.5	128.5	40	9	22	1.45 (2.96)
		1/2" BSPP LH	405-1121-305LB	405-1321-305LB															
		1/2" BSPP RH	405-3121-305RB	405-3321-305RB	1/2" BSPP	3/8" BSPP		3/8" BSPP											
		1/2" BSPP LH	405-3121-305LB	405-3321-305LB															
DN20	3/4"	3/4" BSPP RH	407-1121-307RB	407-1321-307RB	3/4" NPT	1/2" NPT	Q12.8	1/2" NPT	67	18	53	20	188.5	107.5	151	49.5	12	28	1.8 (3.67)
		3/4" BSPP LH	407-1121-307LB	407-1321-307LB															
		3/4" BSPP RH	407-3121-307RB	407-3321-307RB	3/4" BSPP	1/2" BSPP		1/2" BSPP											
		3/4" BSPP LH	407-3121-307LB	407-3321-307LB															
DN25	1"	1" BSPP RH	410-1121-310RB	410-1321-310RB	1" NPT	3/4" NPT	Q15.8	1/2" NPT	75	22	59	25	209.5	120.5	171	51.5	12	32	2.75 (5.61)
		1" BSPP LH	410-1121-310LB	410-1321-310LB															
		1" BSPP RH	410-3121-310RB	410-3321-310RB	1" BSPP	3/4" BSPP		1/2" BSPP											
		1" BSPP LH	410-3121-310LB	410-3321-310LB															
DN32	1 1/4"	1 1/4" BSPP RH	412-1121-312RB	412-1321-312RB	1 1/4" NPT	1" NPT	Q21.8	3/4" NPT	88	26	60	32	243.5	137	196.5	62.5	12	42	3.8 (7.76)
		1 1/4" BSPP LH	412-1121-312LB	412-1321-312LB															
		1 1/4" BSPP RH	412-3121-312RB	412-3321-312RB	1 1/4" BSPP	1" BSPP		3/4" BSPP											
		1 1/4" BSPP LH	412-3121-312LB	412-3321-312LB															
DN40	1 1/2"	1 1/2" BSPP RH	415-1121-315RB	415-1321-315RB	1 1/2" NPT	1 1/4" NPT	Q25.8	3/4" NPT	105	28	69.5	40	277.5	151.5	222.5	76.5	18	52	5.5 (11.22)
		1 1/2" BSPP LH	415-1121-315LB	415-1321-315LB															
		1 1/2" BSPP RH	415-3121-315RB	415-3321-315RB	1 1/2" BSPP	1 1/4" BSPP		3/4" BSPP											
		1 1/2" BSPP LH	415-3121-315LB	415-3321-315LB															
DN50	2"	2" BSPP RH	420-1121-320RB	420-1321-320RB	2" NPT	1 1/2" NPT	Q32.1	1 1/4" NPT	115	28	80	50	313.5	178	255	83	18	62	8.2 (16.73)
		2" BSPP LH	420-1121-320LB	420-1321-320LB															
		2" BSPP RH	420-3121-320RB	420-3321-320RB	2" BSPP	1 1/2" BSPP		1 1/4" BSPP											
		2" BSPP LH	420-3121-320LB	420-3321-320LB															

400-400A SERIES SPARE PARTS

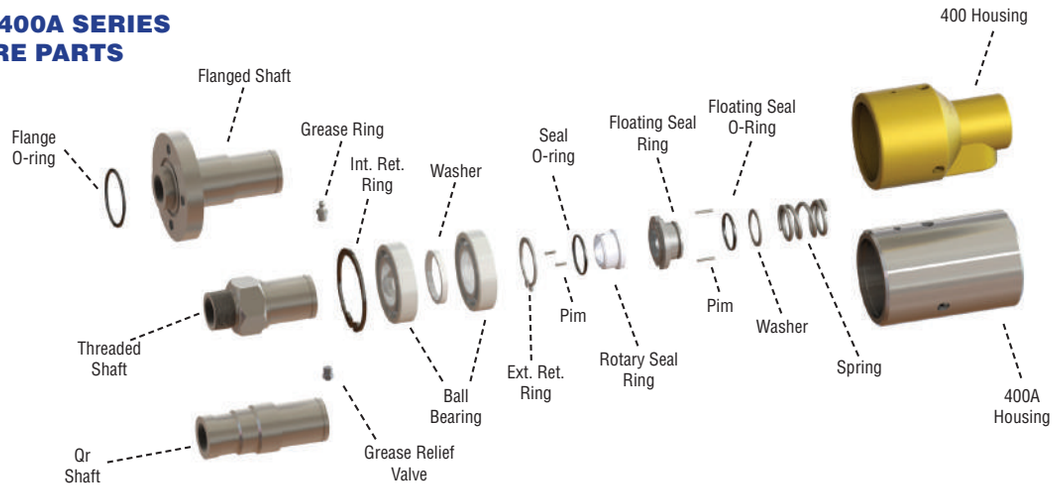

PART NAME	1/4"	3/8"	1/2"	3/4"	1"	1 1/4"	1 1/2"	2"
400 HOUSING (BSPP)	RY013211302R000	RY013211303R000	RY013211305R000	RY013211307R000	RY013211310R000	RY013211312R000	RY013211315R000	RY013211320R000
400 HOUSING (NPT)	RY013211102R000	RY013211103R000	RY013211105R000	RY013211107R000	RY013211110R000	RY013211112R000	RY013211115R000	RY013211120R000
400A HOUSING (BSPP)	RY013311302R000	RY013311303R000	RY013311305R000	RY013311307R000	RY013311310R000	RY013311312R000	RY013311315R000	RY013311320R000
400A HOUSING (NPT)	RY013311102R000	RY013311103R000	RY013311105R000	RY013311107R000	RY013311110R000	RY013311112R000	RY013311115R000	RY013311120R000
SHAFT - NPT - RH	RY01431102R0000	RY01431103R0000	RY01431105R0000	RY01431107R0000	RY01431110R0000	RY01431112R0000	RY01431115R0000	RY01431120R0000
SHAFT - NPT - LH	RY01431102L0000	RY01431103L0000	RY01431105L0000	RY01431107L0000	RY01431110L0000	RY01431112L0000	RY01431115L0000	RY01431120L0000
SHAFT - BSPP - RH	RY01431302R0000	RY01431303R0000	RY01431305R0000	RY01431307R0000	RY01431310R0000	RY01431312R0000	RY01431315R0000	RY01431320R0000
SHAFT - BSPP LH	RY01431302L0000	RY01431303L0000	RY01431305L0000	RY01431307L0000	RY01431310L0000	RY01431312L0000	RY01431315L0000	RY01431320L0000
BALL BEARING	HD0160103004000	HD0160103004000	HD0160103006000	HD0160103007000	HD0160103008000	HD0160103010000	HD0160103012000	HD0160103014000
WASHER	HD0190101001000	HD0190101001000	HD0190101002000	HD0190101003000	HD0190101004000	HD0190101005000	HD0190101006000	HD0190101007000
EXT. RETAINING RING	HD0180101006000	HD0180101006000	HD0180101008000	HD0180101010000	HD0180101011000	HD0180101013000	HD0180101015000	HD0180101016000
INT. RETAINING RING	HD0180201007000	HD0180201007000	HD0180201011000	HD0180201015000	HD0180201018000	HD0180201022000	HD0180201025000	HD0180201028000
ROTARY SEAL RING - CARBON	HD0050101001000	HD0050101001000	HD0050101002000	HD0050101003000	HD0050101004000	HD0050101005000	HD0050101006000	HD0050101007000
ROTARY SEAL RING - SIC	HD0050401001000	HD0050401001000	HD0050401002000	HD0050401003000	HD0050401004000	HD0050401005000	HD0050401006000	HD0050401007000
ROTARY SEAL RING O-RING (VITON)	HD0170001156000	HD0170001156000	HD0170001063000	HD0170001020000	HD0170001149000	HD0170001157000	HD0170001158000	HD0170001159000
SEAL RING PIM	HD0210201002000	HD0210201002000	HD0210201002000	HD0210201002000	HD0210201002000	HD0210201002000	HD0210201002000	HD0210201002000
FLOATING SEAL RING - CARBON	HD0050103001000	HD0050103001000	HD0050103002000	HD0050103003000	HD0050103004000	HD0050103005000	HD0050103006000	HD0050103007000
FLOATING SEAL RING - SIC	HD0050403001000	HD0050403001000	HD0050403002000	HD0050403003000	HD0050403004000	HD0050403005000	HD0050403006000	HD0050403007000
FLOATING SEAL O-RING (VITON)	HD0170001024000	HD0170001024000	HD0170001004000	HD0170001005000	HD0170001006000	HD0170001007000	HD0170001165000	HD0170001029000
PIM	HD0210201002000	HD0210201002000	HD0210201003000	HD0210201003000	HD0210201003000	HD0210201007000	HD0210201007000	HD0210201013000
WASHER	HD0190102003000	HD0190102003000	HD0190102004000	HD0190102005000	HD0190102006000	HD0190102007000	HD0190102008000	HD0190102009000
SPRING	HD0150001009000	HD0150001009000	HD0150001010000	HD0150001011000	HD0150001012000	HD0150001013000	HD0150001014000	HD0150001015000
GREASE RING	HD0250100001000	HD0250100001000	HD0250100001000	HD0250100001000	HD0250100001000	HD0250100001000	HD0250100001000	HD0250100001000
GREASE RELIEF FITTING	HD0260100001000	HD0260100001000	HD0260100001000	HD0260100001000	HD0260100001000	HD0260100001000	HD0260100001000	HD0260100001000

400B SERIES SPARE PARTS

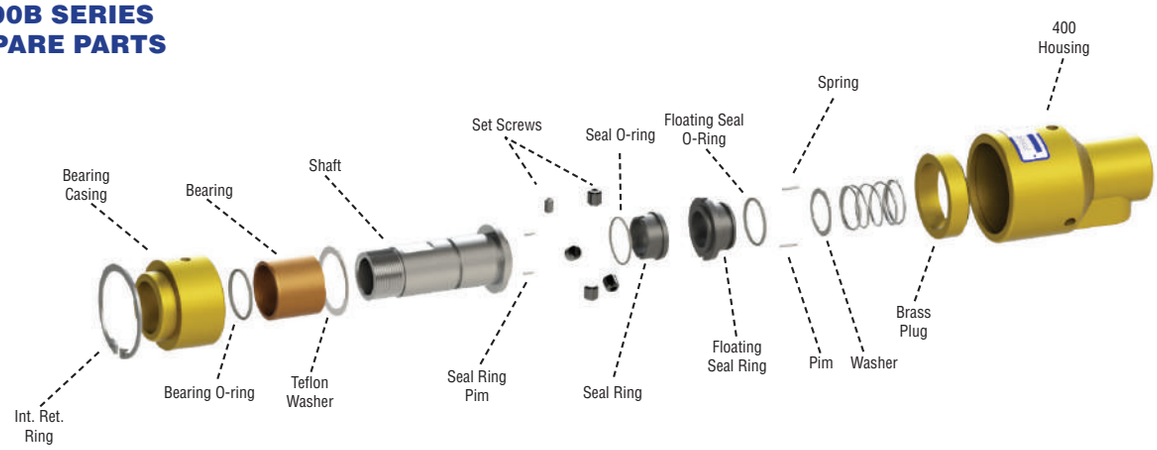

PART NAME	1/4"	3/8"	1/2"	3/4"	1"	1 1/4"	1 1/2"	2"
400 HOUSING (BSPP)	RY013211302R000	RY013211303R000	RY013211305R000	RY013211307R000	RY013211310R000	RY013211312R000	RY013211315R000	RY013211320R000
400 HOUSING (NPT)	RY013211102R000	RY013211103R000	RY013211105R000	RY013211107R000	RY013211110R000	RY013211112R000	RY013211115R000	RY013211120R000
SHAFT - NPT - RH	RY02111102R0000	RY02111103R0000	RY02111105R0000	RY02111107R0000	RY02111110R0000	RY02111112R0000	RY02111115R0000	RY02111120R0000
SHAFT - NPT - LH	RY02111102L0000	RY02111103L0000	RY02111105L0000	RY02111107L0000	RY02111110L0000	RY02111112L0000	RY02111115L0000	RY02111120L0000
SHAFT - BSPP - RH	RY02111302R0000	RY02111303R0000	RY02111305R0000	RY02111307R0000	RY02111310R0000	RY02111312R0000	RY02111315R0000	RY02111320R0000
SHAFT - BSPP LH	RY02111302L0000	RY02111303L0000	RY02111305L0000	RY02111307L0000	RY02111310L0000	RY02111312L0000	RY02111315L0000	RY02111320L0000
BEARING CASING	RY0230101003000	RY0230101003000	RY0230101004000	RY0230101005000	RY0230101006000	RY0230101007000	RY0230101008000	RY0230101009000
BEARING	HD0100101003000	HD0100101003000	HD0100101013000	HD0100101001000	HD0100101002000	HD0100101004000	HD0100101005000	HD0100101006000
BEARING O-RING (VITON)	HD0170001024000	HD0170001024000	HD0170001005000	HD0170001023000	HD0170001012000	HD0170001013000	HD0170001034000	HD0170001035000
TEFLON WASHER	HD0190106003000	HD0190106003000	HD0190106004000	HD0190106001000	HD0190106002000	HD0190106005000	HD0190106006000	HD0190106007000
INT. RETAINING RING	HD0180201007000	HD0180201007000	HD0180201011000	HD0180201015000	HD0180201018000	HD0180201022000	HD0180201025000	HD0180201028000
ROTARY SEAL RING - CARBON	HD0050101001000	HD0050101001000	HD0050101002000	HD0050101003000	HD0050101004000	HD0050101005000	HD0050101006000	HD0050101007000
ROTARY SEAL RING - SIC	HD0050401001000	HD0050401001000	HD0050401002000	HD0050401003000	HD0050401004000	HD0050401005000	HD0050401006000	HD0050401007000
ROTARY SEAL RING O-RING (VITON)	HD0170001156000	HD0170001156000	HD0170001063000	HD0170001020000	HD0170001149000	HD0170001157000	HD0170001158000	HD0170001159000
SEAL RING PIM (2 PCS)	HD0210201002000	HD0210201002000	HD0210201002000	HD0210201002000	HD0210201002000	HD0210201002000	HD0210201002000	HD0210201002000
SET SCREW (1 PC)	HD0290001020000	HD0290001003000	HD0290001003000	HD0290001003000	HD0290001003000	HD0290001003000	HD0290001003000	HD0290001003000
SET SCREW (4 PCS)	HD0290001003000	HD0290001003000	HD0290001006000	HD0290001006000	HD0290001006000	HD0290001006000	HD0290001006000	HD0290001006000
BRASS PLUG	RY0220101003000	RY0220101003000	RY0220101004000	RY0220101005000	RY0220101006000	RY0220101007000	RY0220101008000	RY0220101009000
FLOATING SEAL RING - CARBON	HD0050103001000	HD0050103001000	HD0050103002000	HD0050103003000	HD0050103004000	HD0050103005000	HD0050103006000	HD0050103007000
FLOATING SEAL RING - SIC	HD0050403001000	HD0050403001000	HD0050403002000	HD0050403003000	HD0050403004000	HD0050403005000	HD0050403006000	HD0050403007000
FLOATING SEAL O-RING (VITON)	HD0170001024000	HD0170001024000	HD0170001004000	HD0170001005000	HD0170001006000	HD0170001007000	HD0170001165000	HD0170001029000
PIM	HD0210201002000	HD0210201002000	HD0210201003000	HD0210201003000	HD0210201003000	HD0210201007000	HD0210201007000	HD0210201013000
WASHER	HD0190102003000	HD0190102003000	HD0190102004000	HD0190102005000	HD0190102006000	HD0190102007000	HD0190102008000	HD0190102009000
SPRING	HD0150001009000	HD0150001009000	HD0150001010000	HD0150001011000	HD0150001012000	HD0150001013000	HD0150001014000	HD0150001015000

DUAL FLOW ELBOWS S TYPE / RSP TYPE

S TYPE

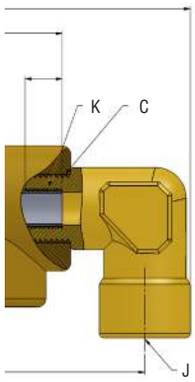

RSP TYPE

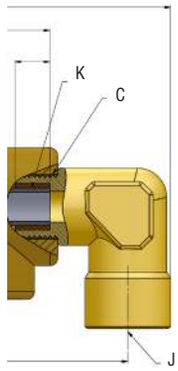

Rotary siphon pipe is supported with bronze bearing

ROTARY JOINT SIZE		S TYPE				RSP TYPE		
		OUTLET (J)	SIPHON SIZE (K)	SIPHON THREAD TYPE	STOCK CODE	OUTLET (J)	SIPHON SIZE	STOCK CODE
DN10	3/8”	1/4” BSPP	1/16”	M6	RY0171012003232	1/4” BSPP	Q5.8	RY0171013013232
DN15	1/2”	3/8” BSPP	1/8”	BSPP	RY0171512313333	3/8” BSPP	Q9.8	RY0171513023333
		3/8” NPT		NPT	RY0171512111313	3/8” NPT		RY0171513021313
DN20	3/4”	1/2” BSPP	1/8”	BSPP	RY0172012313434	1/2” BSPP	Q9.8	RY0172013023434
		1/2” NPT		NPT	RY0172012111414	1/2” NPT		RY0172013031414
		1/2” BSPP	1/4”	BSPP	RY0172012323434	1/2” BSPP	Q12.8	RY0172012033434
		1/2” NPT		NPT	RY0172012121414	1/2” NPT		RY0172013031414
DN25	1”	1/2” BSPP	1/4”	BSPP	RY0172512323534	1/2” BSPP	Q12.8	RY0172513033534
		1/2” NPT		NPT	RY0172512121514	1/2” NPT		RY0172513031514
		1/2” BSPP	3/8”	BSPP	RY0172512333534	1/2” BSPP	Q15.8	RY0172513043534
		1/2” NPT		NPT	RY0172512131514	1/2” NPT		RY0172513041514
DN32	1 1/4”	3/4” - BSPP	1/2”	BSPP	RY0173212343635	3/4” - BSPP	Q21.8	RY0173213053635
		3/4” - NPT		NPT	RY0173212141615	3/4” - NPT		RY0173213051615
DN40	1 1/2”	3/4” - BSPP	1/2”	BSPP	RY0174012343735	3/4” - BSPP	Q21.8	RY0174013053735
		3/4” - NPT		NPT	RY0174012141715	3/4” - NPT		RY0174013051715
		3/4” - BSPP	3/4”	BSPP	RY0174012353735	3/4” - BSPP	Q25.8	RY0174013063735
		3/4” - NPT		NPT	RY0174012151715	3/4” - NPT		RY0174013061715
DN50	2”	1 1/4” - BSPP	1/2”	BSPP	RY0175012343837	1 1/4” - BSPP	Q21.8	RY0175013053837
		1 1/4” - NPT		NPT	RY0175012141817	1 1/4” - NPT		RY0175013051817
		1 1/4” - BSPP	3/4”	BSPP	RY0175012353837	1 1/4” - BSPP	Q25.8	RY0175013063837
		1 1/4” - NPT		NPT	RY0175012151817	1 1/4” - NPT		RY0175013061817
		1 1/4” - BSPP	1”	BSPP	RY0175012363837	1 1/4” - BSPP	Q31.8	RY0175013073837
		1 1/4” - NPT		NPT	RY0175012161817	1 1/4” - NPT		RY0175013071817

For other sizes and thread types, please consult factory

500 SERIES

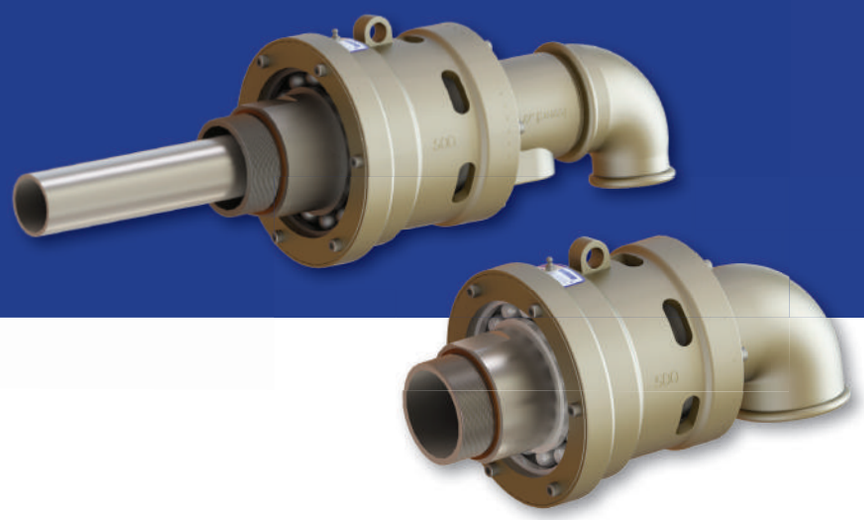

For WATER
2"(DN50) – 4"(DN100)

- Single flow and dual flow design
- Self supported rotating joint
- Radial housing connection
- Balanced mechanical seals
- Easy and quick replacement of sealing elements
- Stainless steel internal parts

Application Parameters

Max. Pressure	: 10 bar	150psi
Max. Temperature	: 120°C	250°F
Max. Speed	: 750 RPM	750min^{-1}

Avoid working with max. speed at max. pressure

REPLACEMENT OF SEALS

No need to disassemble the joint from the system. Just remove bolts on the end cap and seperate end cap with hoses. Remove old rotary seal and floating seal group and replace them with new ones. Place end cap on the housing and fix it with bolts.

For further information, please consult FACTORY, or your local representative

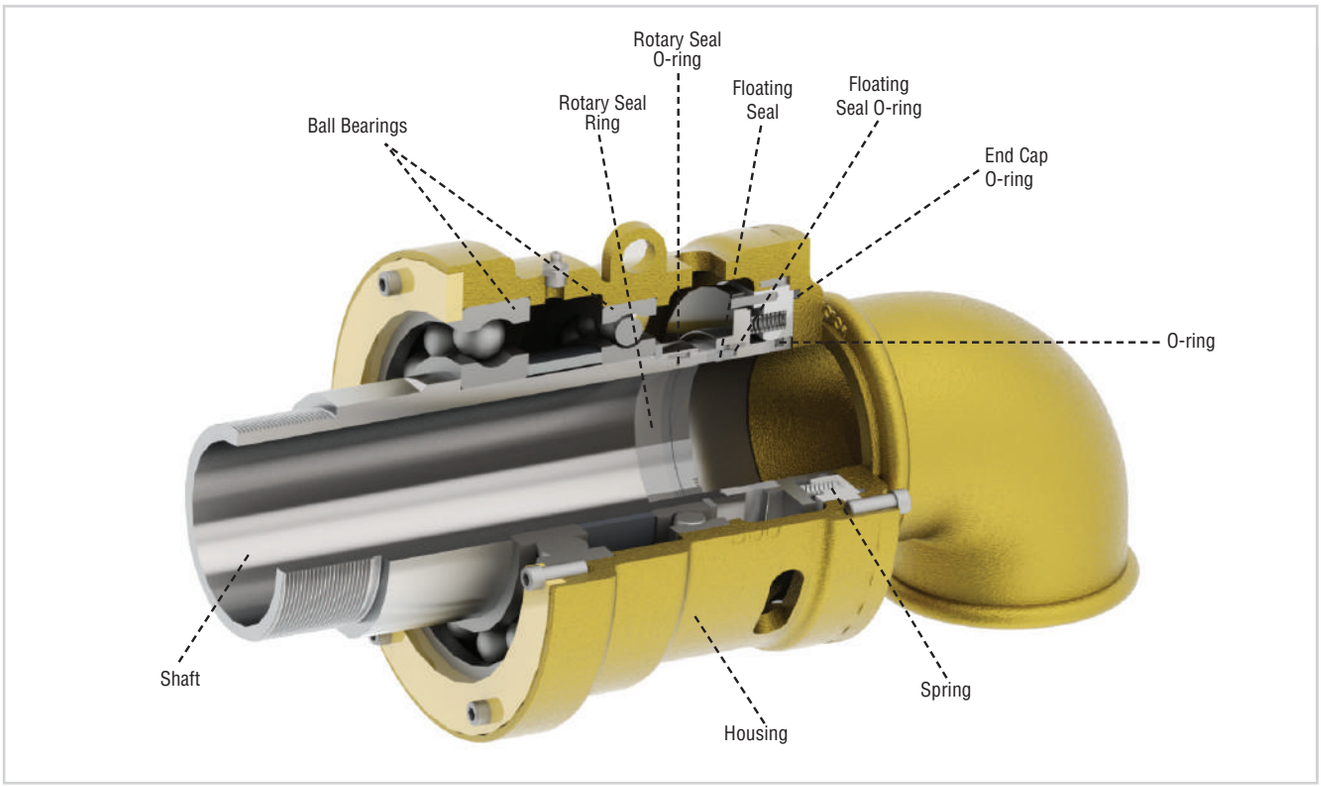

500 SERIES SINGLE FLOW

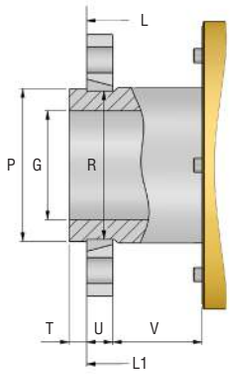

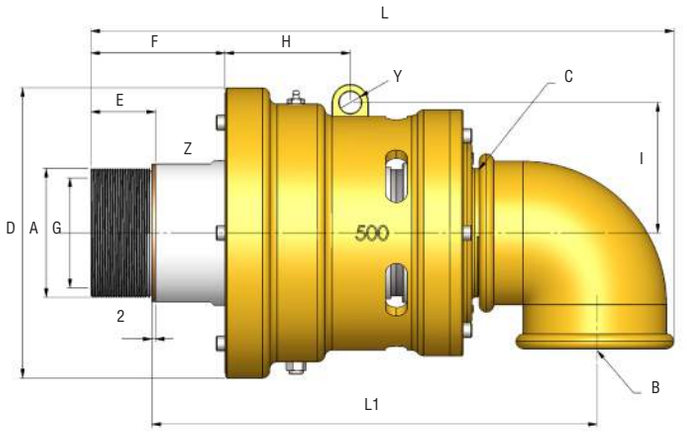

Z: 2x Wrench Flats

Single flow joints are used when supply and return lines are connected to opposite sides of the cylinder.

SHAFT SIZE			SEAL TYPE		B	C	D	E	F	G	H	I	Y
A		THREAD TYPE	CARBON-SIC STOCK CODE	SIC-SIC STOCK CODE									
DN50	2”	2” NPT RH	520-21140-0010	520-31140-0010	2” NPT	2” NPT	156	29	71.5	50	65	69	15
		2” NPT LH	520-21140-0011	520-31140-0011									
		2” BSPP RH	520-21340-0030	520-31340-0030	2” BSPP	2” BSPP							
		2” BSPP LH	520-21340-0031	520-31340-0031									
		QR	520-21340-0060	520-31340-0060				-	-				
		FLANGE TYPE 1	520-21340-0040	520-31340-0040				-	-				
		FLANGE TYPE 2	520-21340-0050	520-31340-0050				-	-				
DN65	2 1/2”	2 1/2” NPT RH	525-21150-0012	525-31150-0012	2 1/2” NPT	2 1/2” NPT	175	30	72.5	65	73	80.5	15
		2 1/2” NPT LH	525-21150-0013	525-31150-0013									
		2 1/2” BSPP RH	525-21350-0032	525-31350-0032	2 1/2” BSPP	2 1/2” BSPP							
		2 1/2” BSPP LH	525-21350-0033	525-31350-0033									
		QR	525-21350-0060	525-31350-0060				-	-				
		FLANGE TYPE 1	525-21350-0040	525-31350-0040				-	-				
		FLANGE TYPE 2	525-21350-0050	525-31350-0050				-	-				
DN80	3”	3” NPT RH	530-21160-0014	530-31160-0014	3” NPT	3” NPT	198	44	91.5	75	85.5	89	15
		3” NPT LH	530-21160-0015	530-31160-0015									
		3” BSPP RH	530-21360-0034	530-31360-0034	3” BSPP	3” BSPP							
		3” BSPP LH	530-21360-0035	530-31360-0035									
		QR	530-21360-0060	530-31360-0060				-	-				
		FLANGE TYPE 1	530-21360-0040	530-31360-0040				-	-				
		FLANGE TYPE 2	530-21360-0050	530-31360-0050				-	-				
DN100	4”	4” NPT RH	540-21170-0016	540-31170-0016	4” NPT	4” NPT	239	45	117	95	103.5	111	15
		4” NPT LH	540-21170-0017	540-31170-0017									
		4” BSPP RH	540-21370-0036	540-31370-0036	4” BSPP	4” BSPP							
		4” BSPP LH	540-21370-0037	540-31370-0037									
		QR	540-21370-0060	540-31370-0060				-	-				
		FLANGE TYPE 1	540-21370-0040	540-31370-0040				-	-				
		FLANGE TYPE 2	540-21370-0050	540-31370-0050				-	-				

500 SERIES SINGLE FLOW

FLANGE - TYPE 1

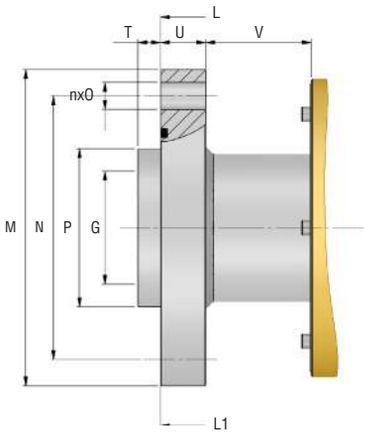

FLANGE - TYPE 2

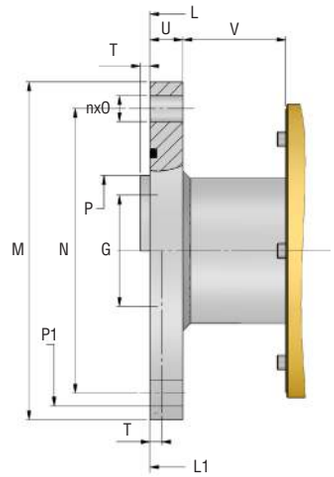

L	L1	M	N	n x O	P	P1	R	T	U	V	Z	WEIGHT kg (lb)
309	243.5	-	-	-	-	-	-	-	-	-	68	13 (28.6)
299	261	-	-	-	65	-	63	10	16	45.5	-	
309	271	130	100	4x14	65	-	-	10	15	56.5	-	14 (30.8)
319	281	228	162	4x17.5	-	211.25	-	6.4	25.4	56.5	-	19 (41.8)
345	270.5	-	-	-	-	-	-	-	-	-	84	18 (39.6)
335	289	-	-	-	85	-	82	10	16	46.5	-	
360	314	180	145	4x18	85	-	-	12	25	62.5	-	22.5 (49.5)
360	314	228	162	4x17.5	-	211.25	-	6.4	25.4	62.5	-	24 (52.8)
398	302.5	-	-	-	-	-	-	-	-	-	94	26 (57.2)
386	332	-	-	-	105	-	102	12	19	60.5	-	
406	352	210	175	6x18	105	-	-	15	30	69.5	-	32.5 (71.5)
398	344	228	192	6x17.5	101.7	-	-	6.4	22.2	69.5	-	30 (66)
473.5	364	-	-	-	-	-	-	-	-	-	122	51 (112.2)
443.5	376.5	-	-	-	114	-	110	30	34	53	-	
458.5	391.5	230	195	8x18	114	-	-	20	30	72	-	58 (127.6)
450.5	383.5	276	228.6	6x20.6	117.45	-	-	7.5	22.2	72	-	59.5 (130.9)

500 SERIES DUAL FLOW STATIONARY SIPHON PIPE

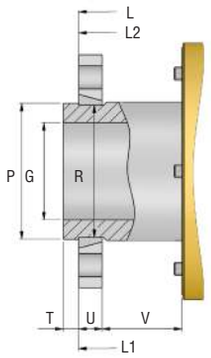

FLANGE - TYPE 1

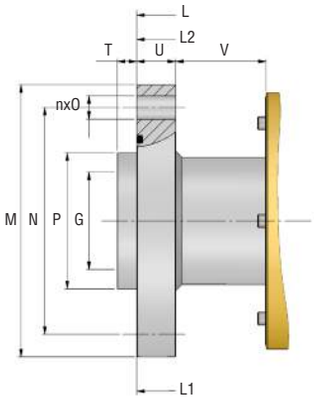

FLANGE - TYPE 2

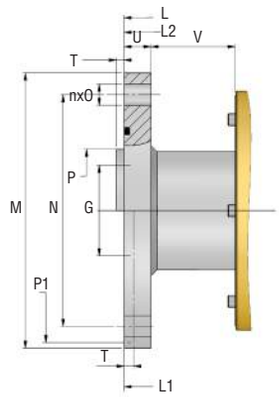

SHAFT SIZE			SEAL TYPE		B	C	K	J	D	E	F	G	H	I
A		THREAD TYPE	CARBON-SIC STOCK CODE	SIC-SIC STOCK CODE										
DN50	2"	2" NPT RH	520-21111-1110	520-31111-1110	1" NPT	1" NPT	1" BSPP	1" NPT	156	29	71.5	50	65	69
		2" NPT LH	520-21111-1111	520-31111-1111										
		2" BSPP RH	520-21311-3130	520-31311-3130	1" BSPP	1" BSPP		1" BSPP						
		2" BSPP LH	520-21311-3131	520-31311-3131										
		QR	520-21311-3160	520-31311-3160						-	-			
		FLANGE TYPE 1	520-21311-3140	520-31311-3140						-	-			
		FLANGE TYPE 2	520-21311-3150	520-31311-3150						-	-			
DN65	2 1/2"	2 1/2" NPT RH	525-21133-1312	525-31133-1312	1 1/2" NPT	1 1/2" NPT	1 1/2" BSPP	1 1/2" NPT	175	30	72.5	65	73	80.5
		2 1/2" NPT LH	525-21133-1313	525-31133-1313										
		2 1/2" BSPP RH	525-21333-3332	525-31333-3332	1 1/2" BSPP	1 1/2" BSPP		1 1/2" BSPP						
		2 1/2" BSPP LH	525-21333-31333	525-31333-3333										
		QR	525-21333-3360	525-31333-3360						-	-			
		FLANGE TYPE 1	525-21333-3340	525-31333-3340						-	-			
		FLANGE TYPE 2	525-21333-3350	525-31333-3350						-	-			
DN80	3"	3" NPT RH	530-21144-1414	530-31144-1414	2" NPT	2" NPT	2" BSPP	2" NPT	198	44	91.5	75	85.5	89
		3" NPT LH	530-21144-1415	530-31144-1415										
		3" BSPP RH	530-21344-3434	530-31344-3434	2" BSPP	2" BSPP		2" BSPP						
		3" BSPP LH	530-21344-3445	530-31344-3445										
		QR	530-21344-3460	530-31344-3460						-	-			
		FLANGE TYPE 1	530-21344-3440	530-31344-3440						-	-			
		FLANGE TYPE 2	530-21344-3450	530-31344-3450						-	-			
DN100	4"	4" NPT RH	540-21155-1516	540-31155-1516	2 1/2" NPT	2 1/2" NPT	2 1/2" BSPP	2 1/2" NPT	239	45	117	95	103.5	111
		4" NPT LH	540-21155-1517	540-31155-1517										
		4" BSPP RH	540-21355-3536	540-31355-3536	2 1/2" BSPP	2 1/2" BSPP		2 1/2" BSPP						
		4" BSPP LH	540-21355-3547	540-31355-3547										
		QR	540-21355-3560	540-31355-3560						-	-			
		FLANGE TYPE 1	540-21355-3540	540-31355-3540						-	-			
		FLANGE TYPE 2	540-21355-3550	540-31355-3550						-	-			

500 SERIES DUAL FLOW STATIONARY SIPHON PIPE

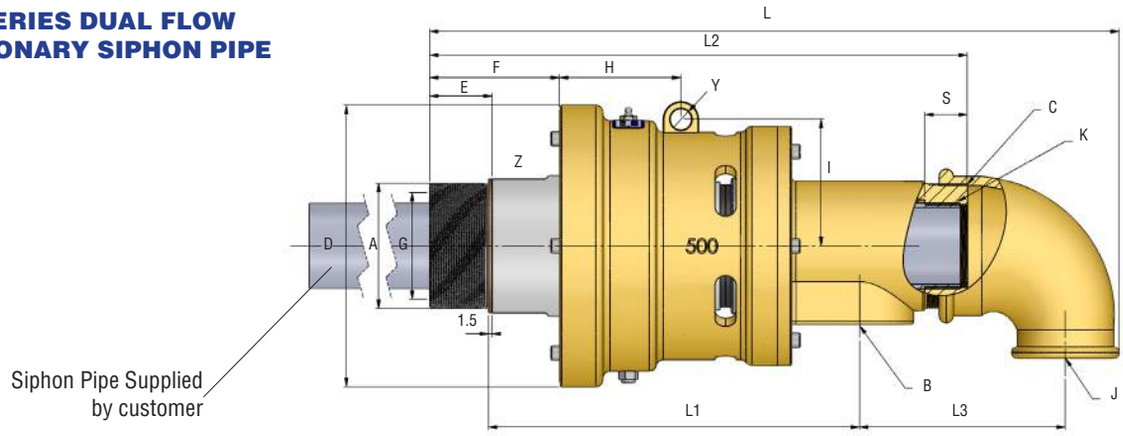

Z: 2x Wrench Flats

Dual flow joints are used when supply and return lines are connected to one side of the cylinder.
Divided siphon pipes must be used when speed is higher than 1000 RPM and siphon pipe is longer than 4xL.

Y	L	L1	L2	L3	M	N	n x O	P	P1	R	S	T	U	V	Z	WEIGHT kg (lb)
15	359	220	303	87.5	-	-	-	-	-	-	25.5	-	-	-	68	15 (33)
	348	237	293		-	-	-	65	-	63		10	16	45.5	-	
	358	247.5	303		130	100	4x14	65	-	-		10	15	56.5	-	16.5 (36.5)
	368	258	313		228	162	4x17.5	-	211.25	-		6.4	25.4	56.5	-	20 (44)
15	400.5	232	322.5	107	-	-	-	-	-	-	26	-	-	-	84	21 (46.2)
	390.5	250.5	315.5		-	-	-	85	-	82		10	16	46.5	-	
	415.5	275.5	340.5		180	145	4x18	85	-	-		12	25	62.5	-	25 (55)
	416	276	341		228	162	4x17.5	-	211.25	-		6.4	25.4	62.5	-	26 (57.2)
15	481	262	379	140	-	-	-	-	-	-	30	-	-	-	94	31 (68.2)
	469	291	367		-	-	-	105	-	102		12	19	60.5	-	
	489	311	387		210	175	5x18	105	-	-		15	30	69.5	-	37 (81.4)
	481	303	379		228	192	6x17.5	101.7	-	-		6.4	22.2	69.5	-	36 (79.2)
15	563	318	445	154	-	-	-	-	-	-	35	-	-	-	122	65 (143)
	533	330.5	417.5		-	-	-	114	-	110		30	34	53	-	
	548	345.5	432.5		230	195	8x18	114	-	-		20	30	72	-	72 (158.4)
	540	338	424		276	228.6	6x20.6	117.45	-	-		7.5	22.2	72	-	73 (160.6)

500 SERIES DUAL FLOW ROTARY SIPHON PIPE

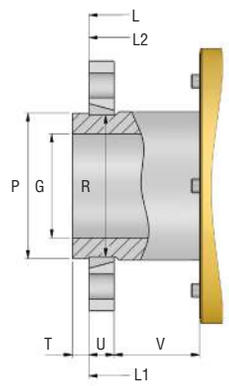

FLANGE - TYPE 1

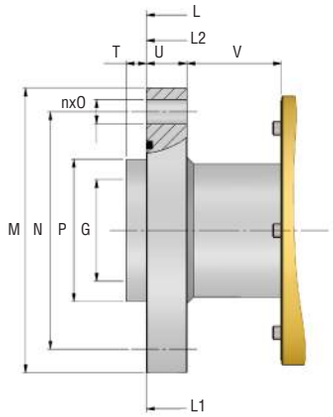

FLANGE - TYPE 2

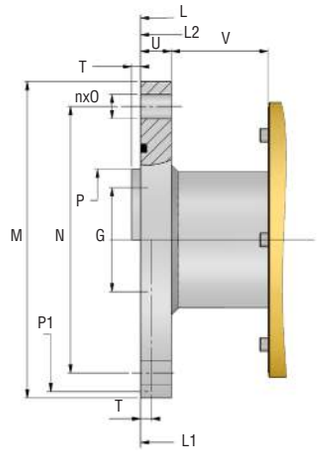

SHAFT SIZE			SEAL TYPE		B	C	K	J	D	E	F	G	H	I
A		THREAD TYPE	CARBON-SIC	SIC-SIC										
			STOCK CODE	STOCK CODE										
DN50	2"	2" NPT RH	520-21111-4110	520-31111-4110	1" NPT	1" NPT	Ø31.6	1" NPT	Ø156	29	71.5	50	65	69
		2" NPT LH	520-21111-4111	520-31111-4111										
		2" BSPP RH	520-21311-4130	520-31311-4130	1" BSPP	1" BSPP		1" BSPP						
		2" BSPP LH	520-21311-4131	520-31311-4131										
		QR	520-21311-4160	520-31311-4160						-	-			
		FLANGE TYPE 1	520-21311-4140	520-31311-4140						-	-			
		FLANGE TYPE 2	520-21311-4150	520-31311-4150						-	-			
DN65	2 1/2"	2 1/2" NPT RH	525-21133-4212	525-31133-4212	1 1/2" NPT	1 1/2" NPT	Ø47.6	1 1/2" NPT	Ø175	30	72.5	65	73	80.5
		2 1/2" NPT LH	525-21133-4213	525-31133-4213										
		2 1/2" BSPP RH	525-21333-4232	525-31333-4232	1 1/2" BSPP	1 1/2" BSPP		1 1/2" BSPP						
		2 1/2" BSPP LH	525-21333-4233	525-31333-4233										
		QR	525-21333-4260	525-31333-4260						-	-			
		FLANGE TYPE 1	525-21333-4240	525-31333-4240						-	-			
		FLANGE TYPE 2	525-21333-4250	525-31333-4250						-	-			
DN80	3"	3" NPT RH	530-21144-4314	530-31144-4314	2" NPT	2" NPT	Ø58.7	2" NPT	Ø198	44	91.5	75	85.5	89
		3" NPT LH	530-21144-4315	530-31144-4315										
		3" BSPP RH	530-21344-4334	530-31344-4334	2" BSPP	2" BSPP		2" BSPP						
		3" BSPP LH	530-21344-4345	530-31344-4345										
		QR	530-21344-4360	530-31344-4360						-	-			
		FLANGE TYPE 1	530-21344-4340	530-31344-4340						-	-			
		FLANGE TYPE 2	530-21344-4350	530-31344-4350						-	-			
DN100	4"	4" NPT RH	540-21155-4416	540-31155-4416	2 1/2" NPT	2 1/2" NPT	Ø74.8	2 1/2" NPT	Ø239	45	117	95	103.5	111
		4" NPT LH	540-21155-4417	540-31155-4417										
		4" BSPP RH	540-21355-4436	540-31355-4436	2 1/2" BSPP	2 1/2" BSPP		2 1/2" BSPP						
		4" BSPP LH	540-21355-4447	540-31355-4447										
		QR	540-21355-4460	540-31355-4460						-	-			
		FLANGE TYPE 1	540-21355-4440	540-31355-4440						-	-			
		FLANGE TYPE 2	540-21355-4450	540-31355-4450						-	-			

500 SERIES DUAL FLOW ROTARY SIPHON PIPE

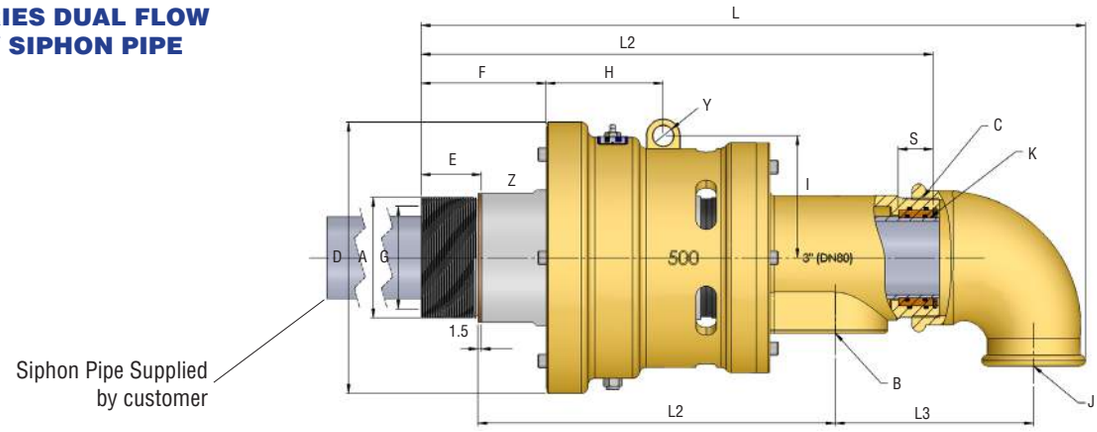

Z: 2x Wrench Flats

Dual flow joints are used when supply and return lines are connected to one side of the cylinder.
Divided siphon pipes must be used when speed is higher than 1000 RPM and siphon pipe is longer than 4xL.

Y	L	L1	L2	L3	M	N	n x O	P	P1	R	S	T	U	V	Z	WEIGHT kg (lb)
15	359	220	303	87.5	-	-	-	-	-	-	25.5	-	-	-	68	15 (33)
	348	237	293		-	-	-	65	-	63		10	16	45.5	-	
	358	247.5	303		130	100	4x14	65	-	-		10	15	56.5	-	16.5 (36.5)
	368	258	313		228	162	4x17.5	-	211.25	-		6.4	25.4	56.5	-	20 (44)
15	400.5	232	322.5	107	-	-	-	-	-	-	26	-	-	-	84	21 (46.2)
	390.5	250.5	315.5		-	-	-	85	-	82		10	16	46.5	-	
	415.5	275.5	340.5		180	145	4x18	85	-	-		12	25	62.5	-	25 (55)
	416	276	341		228	162	4x17.5	-	211.25	-		6.4	25.4	62.5	-	26 (57.2)
15	481	262	379	140	-	-	-	-	-	-	30	-	-	-	94	31 (68.2)
	469	291	367		-	-	-	105	-	102		12	19	60.5	-	
	489	311	387		210	175	5x18	105	-	-		15	30	69.5	-	37 (81.4)
	481	303	379		228	192	6x17.5	101.7	-	-		6.4	22.2	69.5	-	36 (79.2)
15	563	318	445	154	-	-	-	-	-	-	35	-	-	-	122	65 (143)
	533	330.5	417.5		-	-	-	114	-	110		30	34	53	-	
	548	345.5	432.5		230	195	8x18	114	-	-		20	30	72	-	72 (158.4)
	540	338	424		276	228.6	6x20.6	117.45	-	-		7.5	22.2	72	-	73 (160.6)

500 SERIES SINGLE FLOW

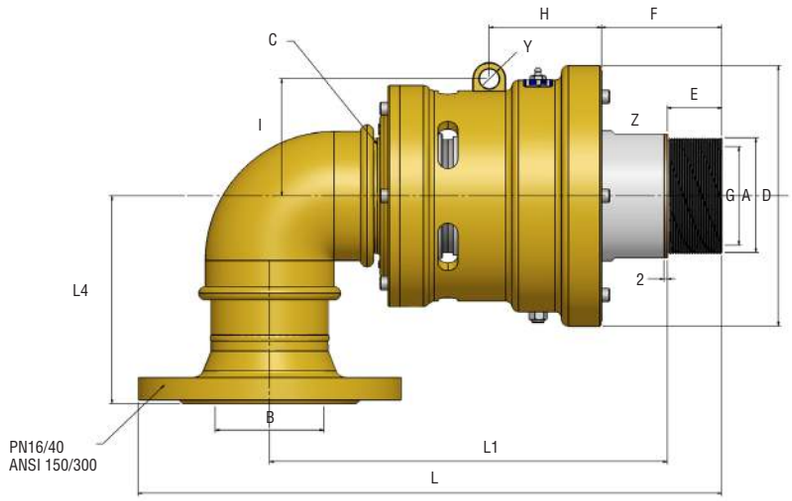

SHAFT SIZE			SEAL TYPE		B (PN16 FLG)	C	D	E	F	G	H	I	Y	L	L1	L4	WEIGHT kg (lb)
A		THREAD TYPE	CARBON-SIC STOCK CODE	SIC-SIC STOCK CODE													
DN50	2"	2" NPT RH	520-21440-0010	520-31440-0010	DN50 FLG	2" NPT	156	29	71.5	50	65	69	15	353	243.5	120	16 (35.2)
		2" NPT LH	520-21440-0011	520-31440-0011													
		2" BSPP RH	520-21440-0030	520-31440-0030		2" BSPP											
		2" BSPP LH	520-21440-0031	520-31440-0031													
		QR	520-21440-0060	520-31440-0060				-	-					343.5	261		
		FLANGE TYPE 1	520-21440-0040	520-31440-0040				-	-					353.5	271		17 (37.4)
		FLANGE TYPE 2	520-21440-0050	520-31440-0050				-	-					363.5	281		22 (48.4)
DN65	2 1/2"	2 1/2" NPT RH	525-21450-0012	525-31450-0012	DN65 FLG	2 1/2" NPT	175	30	72.5	65	73	80.5	15	391	270.5	150	22 (48.4)
		2 1/2" NPT LH	525-21450-0013	525-31450-0013													
		2 1/2" BSPP RH	525-21450-0032	525-31450-0032		2 1/2" BSPP											
		2 1/2" BSPP LH	525-21450-0033	525-31450-0033													
		QR	525-21450-0060	525-31450-0060				-	-					381.5	289		
		FLANGE TYPE 1	525-21450-0040	525-31450-0040				-	-					406.5	314		26.5 (58.3)
		FLANGE TYPE 2	525-21450-0050	525-31450-0050				-	-					406.5	314		28 (61.6)
DN80	3"	3" NPT RH	530-21460-0014	530-31460-0014	DN80 FLG	3" NPT	198	44	91.5	75	85.5	89	15	444.5	302.5	158	30 (66)
		3" NPT LH	530-21460-0015	530-31460-0015													
		3" BSPP RH	530-21460-0034	530-31460-0034		3" BSPP											
		3" BSPP LH	530-21460-0035	530-31460-0035													
		QR	530-21460-0060	530-31460-0060				-	-					432	332		
		FLANGE TYPE 1	530-21460-0040	530-31460-0040				-	-					452	352		36.5 (80.3)
		FLANGE TYPE 2	530-21460-0050	530-31460-0050				-	-					444	344		34 (74.8)
DN100	4"	4" NPT RH	540-21470-0016	540-31470-0016	DN100 FLG	4" NPT	239	45	117	95	103.5	111	15	517	364	180	56 (123.2)
		4" NPT LH	540-21470-0017	540-31470-0017													
		4" BSPP RH	540-21470-0036	540-31470-0036		4" BSPP											
		4" BSPP LH	540-21470-0037	540-31470-0037													
		QR	540-21470-0060	540-31470-0060				-	-					486.5	376.5		
		FLANGE TYPE 1	540-21470-0040	540-31470-0040				-	-					501.5	391.5		63 (138.6)
		FLANGE TYPE 2	540-21470-0050	540-31470-0050				-	-					493.5	383.5		64.5 (141.9)

500 SERIES FLANGED CONNECTIONS
DUAL FLOW STATIONARY SIPHON PIPE

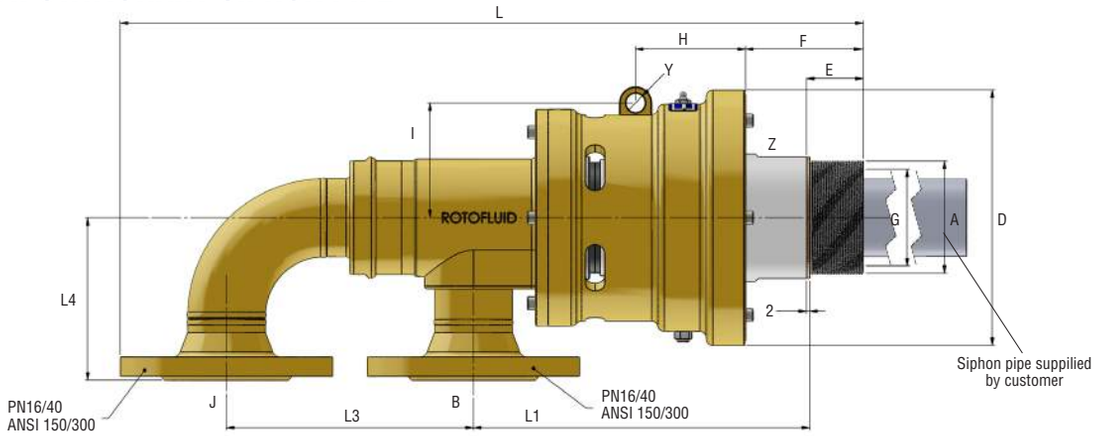

SHAFT SIZE			SEAL TYPE		B (PN16 FLG)	K	J (PN16 FLG)	D	E	F	G	H	I	Y	L	L1	L3	L4	WEIGHT kg (lb)
A		THREAD TYPE	CARBON-SIC STOCK CODE	SIC-SIC STOCK CODE															
DN50	2"	2" NPT RH	520-21411-1110	520-31411-1110	DN25 FLG	1" BSPP	DN25 FLG	156	29	71.5	50	65	69	15	471	243.5	118	120	18 (39.6)
		2" NPT LH	520-21411-1111	520-31411-1111															
		2" BSPP RH	520-21411-3130	520-31411-3130															
		2" BSPP LH	520-21411-3131	520-31411-3131															
		QR	520-21411-3160	520-31411-3160					-	-					436.5	261			
		FLANGE TYPE 1	520-21411-3140	520-31411-3140					-	-					446.5	271			19.5 (42.9)
		FLANGE TYPE 2	520-21411-3150	520-31411-3150					-	-					456.5	281			23 (50.6)
DN65	2 1/2"	2 1/2" NPT RH	525-21433-1312	525-31433-1312	DN40 FLG	1 1/2" BSPP	DN40 FLG	175	30	72.5	65	73	80.5	15	544	270.5	153	150	25 (55)
		2 1/2" NPT LH	525-21433-1313	525-31433-1313															
		2 1/2" BSPP RH	525-21433-3332	525-31433-3332															
		2 1/2" BSPP LH	525-21433-3333	525-31433-3333															
		QR	525-21433-3360	525-31433-3360					-	-					517	289			
		FLANGE TYPE 1	525-21433-3340	525-31433-3340					-	-					542	314			29 (63.8)
		FLANGE TYPE 2	525-21433-3350	525-31433-3350					-	-					542	314			30 (66)
DN80	3"	3" NPT RH	530-21444-1414	530-31444-1414	DN50 FLG	2" BSPP	DN50 FLG	198	44	91.5	75	85.5	89	15	615.5	302.5	171	158	35 (77)
		3" NPT LH	530-21444-1415	530-31444-1415															
		3" BSPP RH	530-21444-3434	530-31444-3434															
		3" BSPP LH	530-21444-3445	530-31444-3445															
		QR	530-21444-3460	530-31444-3460					-	-					585.5	332			
		FLANGE TYPE 1	530-21444-3440	530-31444-3440					-	-					605.5	352			41 (90.2)
		FLANGE TYPE 2	530-21444-3450	530-31444-3450					-	-					597.5	344			40 (88)
DN100	4"	4" NPT RH	540-21455-1516	540-31455-1516	DN65 FLG	2 1/2" BSPP	DN65 FLG	239	45	117	95	103.5	111	15	712	364	195	180	70 (154)
		4" NPT LH	540-21455-1517	540-31455-1517															
		4" BSPP RH	540-21455-3536	540-31455-3536															
		4" BSPP LH	540-21455-3547	540-31455-3547															
		QR	540-21455-3560	540-31455-3560					-	-					654	376.5			
		FLANGE TYPE 1	540-21455-3540	540-31455-3540					-	-					669	391.5			77 (169.4)
		FLANGE TYPE 2	540-21455-3550	540-31455-3550					-	-					661	383.5			78 (171.6)

500 SERIES FLANGED CONNECTIONS
DUAL FLOW ROTARY SIPHON PIPE

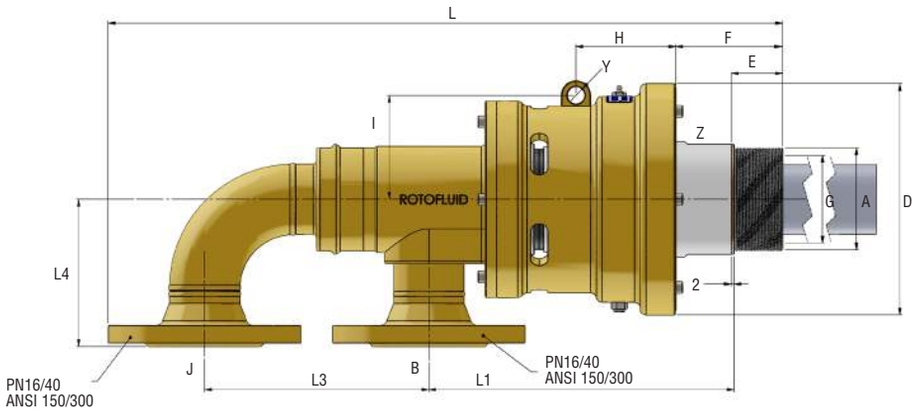

SHAFT SIZE			SEAL TYPE		B (PN16 FLG)	K	J (PN16 FLG)	D	E	F	G	H	I	Y	L	L1	L3	L4	WEIGHT kg (lb)
A		THREAD TYPE	CARBON-SIC STOCK CODE	SIC-SIC STOCK CODE															
DN50	2"	2" NPT RH	520-21411-4110	520-31411-4110	DN25 FLG	31.6	DN25 FLG	156	29	71.5	50	65	69	15	471	243.5	118	120	18 (39.6)
		2" NPT LH	520-21411-4111	520-31411-4111															
		2" BSPP RH	520-21411-4130	520-31411-4130															
		2" BSPP LH	520-21411-4131	520-31411-4131															
		QR	520-21411-4160	520-31411-4160					-	-					436.5	261			
		FLANGE TYPE 1	520-21411-4140	520-31411-4140					-	-					446.5	271			19.5 (42.9)
		FLANGE TYPE 2	520-21411-4150	520-31411-4150					-	-					456.5	281			23 (50.6)
DN65	2 1/2"	2 1/2" NPT RH	525-21433-4212	525-31433-4212	DN40 FLG	47.6	DN40 FLG	175	30	72.5	65	73	80.5	15	544	270.5	153	150	25 (55)
		2 1/2" NPT LH	525-21433-4213	525-31433-4213															
		2 1/2" BSPP RH	525-21433-4232	525-31433-4232															
		2 1/2" BSPP LH	525-21433-4233	525-31433-3433															
		QR	525-21433-4260	525-31433-4260					-	-					517	289			
		FLANGE TYPE 1	525-21433-4240	525-31433-4240					-	-					542	314			29 (63.8)
		FLANGE TYPE 2	525-21433-4250	525-31433-4250					-	-					542	314			30 (66)
DN80	3"	3" NPT RH	530-21444-4314	530-31444-4314	DN50 FLG	58.7	DN50 FLG	198	44	91.5	75	85.5	89	15	615.5	302.5	171	158	35 (77)
		3" NPT LH	530-21444-4315	530-31444-4315															
		3" BSPP RH	530-21444-4334	530-31444-4334															
		3" BSPP LH	530-21444-4345	530-31444-4345															
		QR	530-21444-4360	530-31444-4360					-	-					585.5	332			
		FLANGE TYPE 1	530-21444-4340	530-31444-4340					-	-					605.5	352			41 (90.2)
		FLANGE TYPE 2	530-21444-4350	530-31444-4350					-	-					597.5	344			40 (88)
DN100	4"	4" NPT RH	540-21455-4416	540-31455-4416	DN65 FLG	74.8	DN65 FLG	239	45	117	95	103.5	111	15	712	364	195	180	70 (154)
		4" NPT LH	540-21455-4417	540-31455-4417															
		4" BSPP RH	540-21455-4436	540-31455-4436															
		4" BSPP LH	540-21455-4447	540-31455-4447															
		QR	540-21455-4460	540-31455-4460					-	-					654	376.5			
		FLANGE TYPE 1	540-21455-4440	540-31455-4440					-	-					669	391.5			77 (169.4)
		FLANGE TYPE 2	540-21455-4450	540-31455-4450					-	-					661	383.5			78 (171.6)

500 SERIES
SPARE PARTS

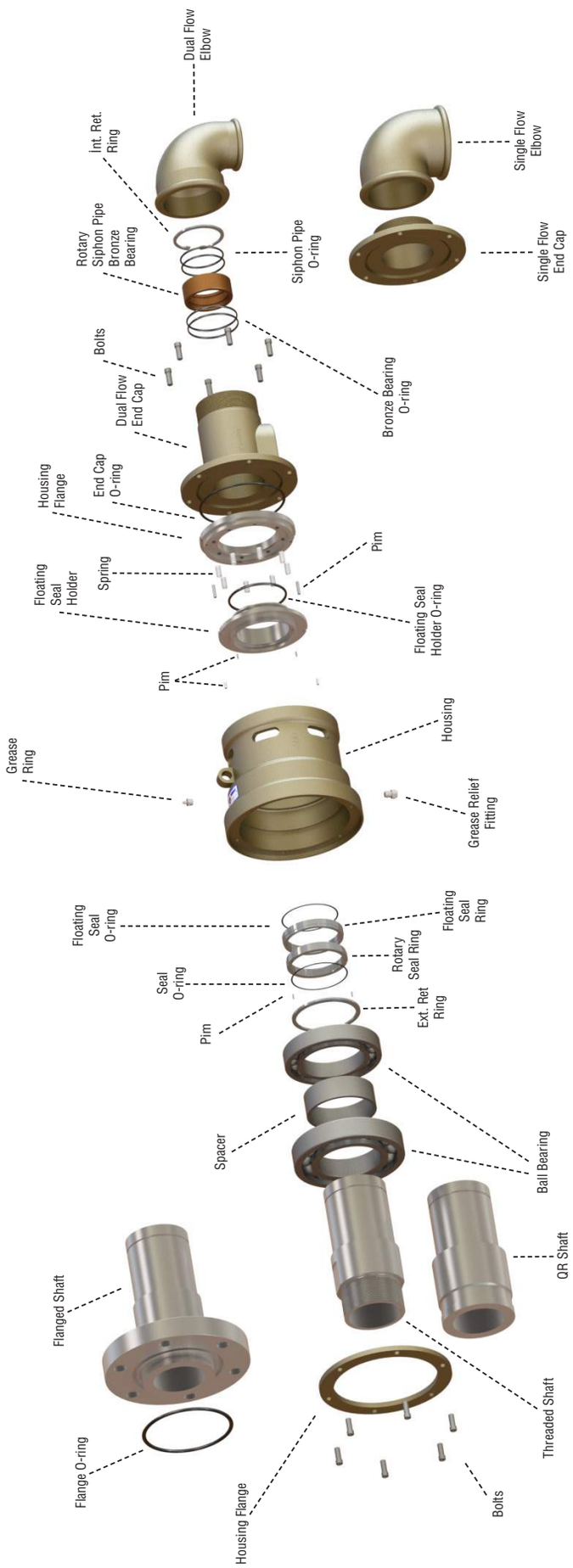

PART NAME	2"	2 1/2"	3"	4"
HOUSING	RY0550101050000	RY0550101065000	RY0550101080000	RY0550101100000
FRONT HOUSING FLANGE	RY0570101050000	RY0570101065000	RY0570101080000	RY0570101100000
SHAFT - NPT - RH	RY0601201120R00	RY0601201125R00	RY0601201130R00	RY0601201140R00
SHAFT - NPT - LH	RY0601201120L00	RY0601201125L00	RY0601201130L00	RY0601201140L00
SHAFT - BSPP - RH	RY0601201320R00	RY0601201325R00	RY0601201330R00	RY0601201340R00
SHAFT - BSPP - LH	RY0601201320L00	RY0601201325L00	RY0601201330L00	RY0601201340L00
SHAFT - QR	RY0601202500000	RY0601202065000	RY0601202080000	RY0601202100000
SHAFT - FLANGE - TYPE 1	RY0601203050000	RY0601203065000	RY0601203080000	RY0601203100000
SHAFT - FLANGE - TYPE 2	RY0601203050040	RY0601203065040	RY0601203080040	RY0601203100040
FRONT BALL BEARING	HD0160103028000	HD0160103029000	HD0160103030000	HD0160103032000
WASHER	RY0580101050000	RY0580101065000	RY0580101080000	RY0580101100000
REAR BALL BEARING	HD0160103014000	HD0160103017000	HD0160103018000	HD0160103033000
EXT. RETAINING RING	HD0180101016000	HD0180101017000	HD0180101018000	HD0180101019000
ROTARY SEAL RING - CARBON	HD0050104010000	HD0050104011000	HD0050104012000	HD0050104013000
ROTARY SEAL RING - SIC	HD0050404010000	HD0050404011000	HD0050404012000	HD0050404013000
ROTARY SEAL O-RING (VITON)	HD0170001159000	HD0170001162000	HD0170001161000	HD0170001163000
PIM	HD0210201002000	HD0210201002000	HD0210201002000	HD0210201002000
FLOATING SEAL RING - CARBON	HD0050104010000	HD0050104011000	HD0050104012000	HD0050104013000
FLOATING SEAL RING - SIC	HD0050404010000	HD0050404011000	HD0050404012000	HD0050404013000
FLOATING SEAL O-RING (VITON)	HD0170001159000	HD0170001162000	HD0170001161000	HD0170001163000
FLOATING SEAL HOLDER	RY0610201010000	RY0610201020000	RY0610201030000	RY0610201040000
FLOATING SEAL HOLDER O-RING (VITON)	HD0170001129000	HD0170001045000	HD0150001150000	HD0150001177000
FLOATING SEAL PIM	HD0210201013000	HD0210201013000	HD0210201013000	HD0210201013000
SPRING	HD0150001032000	HD0150001033000	HD0150001033000	HD0150001034000
HOUSING FLANGE	RY0590101050000	RY0590101065000	RY0590101080000	RY0590101100000
END CAP O-RING (VITON)	HD0150001150000	HD0150001176000	HD0150001151000	HD0150001178000
END CAP - SINGLE FLOW - NPT	RY0561100010000	RY0561100040000	RY0561100070000	RY0561100100000
END CAP - SINGLE FLOW - BSPP	RY0561100030000	RY0561100060000	RY0561100090000	RY0561100120000
END CAP - S TYPE - NPT	RY0561201013100	RY0561207043300	RY0561210073400	RY0561213103500
END CAP - S TYPE - BSPP	RY0561203033100	RY0561209063300	RY0561212093400	RY0561215123500
END CAP - RSP TYPE - NPT	RY0561201014100	RY0561207044200	RY0561210074300	RY0561213104400
END CAP - RSP TYPE -BSPP	RY0561203034100	RY0561209064200	RY0561212094300	RY0561215124400
BOLTS	HD0240201012000	HD0240201012000	HD0240201012000	HD0240201012000
BRONZE BEARING	RY0090110201300	RY0090110201400	RY0090110201700	RY0090110201900
BEARING O-RING (VITON)	HD0150001027000	HD0150001047000	HD0150001058000	HD0150001180000
PIPE O-RING (VITON)	HD0150001179000	HD0150001146000	HD0150001135000	HD0150001181000
INT. RETAINING RING	HD0180201009000	HD0180201017000	HD0180201021000	HD0180201024000
SINGLE FLOW ELBOW	HD0360201010600	HD0360201010700	HD0360201010800	HD0360201010900
DUAL FLOW ELBOW	HD0360401010603	HD0360401010705	HD0360401010806	HD0360401010907
GREASE RING	HD0250100001000	HD0250100001000	HD0250100001000	HD0250100001000
GREASE RELIEF FITTING	HD0260100001000	HD0260100001000	HD0260100001000	HD0260100001000

50 SERIES

For WATER
3/4" (DN20) - 1" (DN25)

- Single and dual flow
- Self supported rotating joint
- Radial housing connection
- Balanced mechanical seals
- Easy and quick replacement of sealing elements
- Cast iron housing
- Forged brass end cap
- Stainless steel internal parts
- Composite bearing

Application Parameters

Max. Water Pressure	: 10 bar	150psi
Max. Water Temperature	: 120°C	250°F
Max. Speed	: 100 min^{-1}	100 RPM

Avoid working with max. speed at max. pressure

For further information, please consult FACTORY, or your local representative

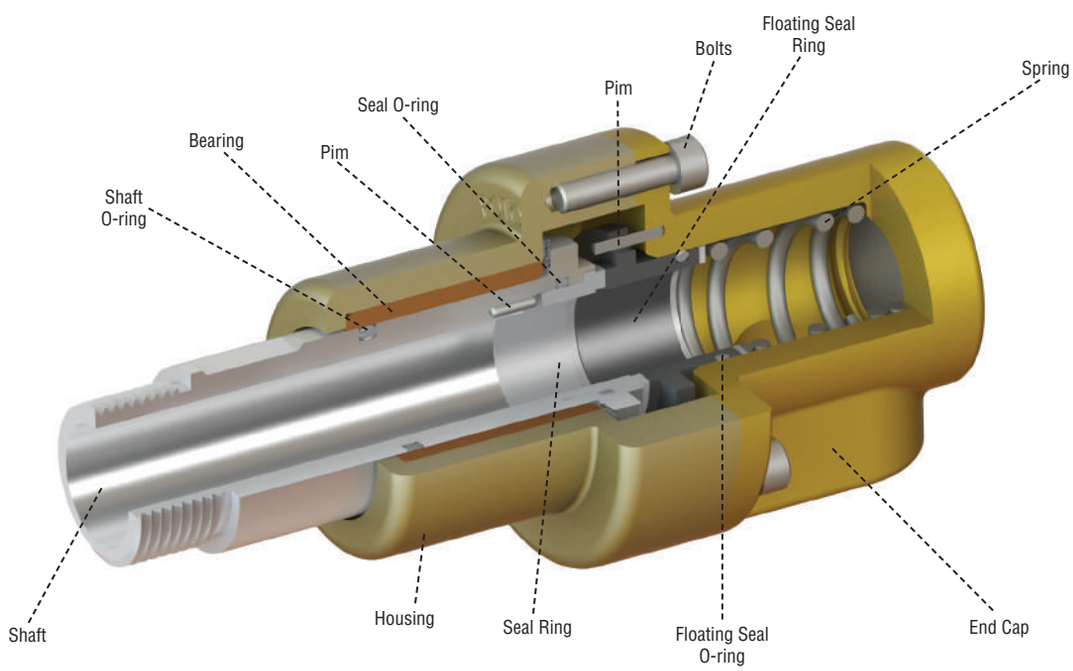

50 SERIES SINGLE FLOW

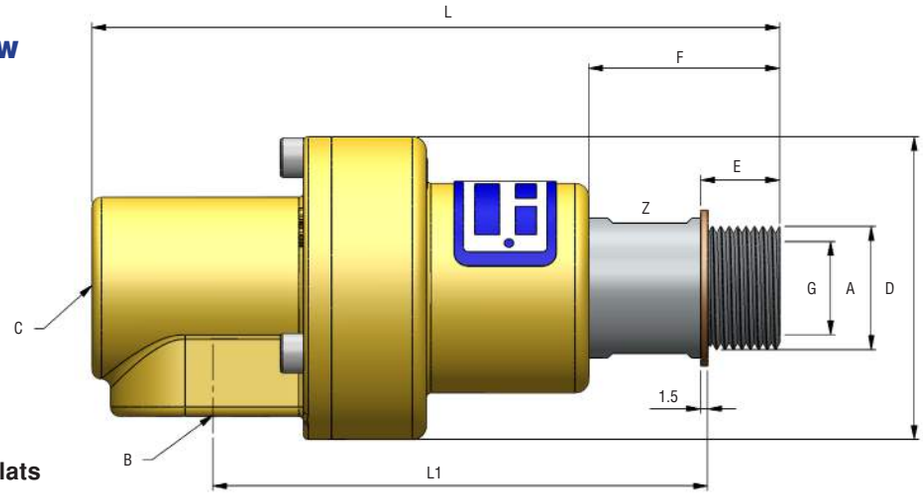

Z: 2x Wrench Flats

SINGLE FLOW

SHAFT SIZE			SEAL TYPE			
			CARBON-SIC		SIC-SIC	
A		THREAD TYPE	STOCK CODE	STOCK CODE	STOCK CODE	STOCK CODE
			LH	RH	LH	RH
DN20	3/4”	3/4” NPT	0053-1121-107L	0053-1121-107R	0053-1321-107L	0053-1321-107R
		3/4” BSPP	0053-1121-307L	0053-1121-307R	0053-1321-307L	0053-1321-307R
		3/4” BSPP	0053-3121-307L	0053-3121-307R	0053-3321-307L	0053-3321-307R
DN25	1”	3/4” NPT	0055-1121-110L	0055-1121-110R	0055-1321-110L	0055-1321-110R
		3/4” BSPP	0055-1121-310L	0055-1121-310R	0055-1321-310L	0055-1321-310R
		3/4” BSPP	0055-3121-310L	0055-3121-310R	0055-3321-310L	0055-3321-310R

DUAL FLOW - STATIONARY SIPHON PIPE

SHAFT SIZE			SEAL TYPE				B	C	J
			CARBON-SIC		SIC-SIC				
A		THREAD TYPE	STOCK CODE	STOCK CODE	STOCK CODE	STOCK CODE			
			LH	RH	LH	RH			
DN20	3/4”	3/4” NPT	0053-1121-107L	0053-1121-107R	0053-1321-107L	0053-1321-107R	3/4” NPT	1/2” NPT	1/2” NPT
		3/4” BSPP	0053-1121-307L	0053-1121-307R	0053-1321-307L	0053-1321-307R			
		3/4” BSPP	0053-3121-307L	0053-3121-307R	0053-3321-307L	0053-3321-307R	3/4” BSPP	1/2” BSPP	1/2” BSPP
DN25	1”	3/4” NPT	0055-1121-110L	0055-1121-110R	0055-1321-110L	0055-1321-110R	1” NPT	3/4” NPT	1/2” NPT
		3/4” BSPP	0055-1121-310L	0055-1121-310R	0055-1321-310L	0055-1321-310R			
		3/4” BSPP	0055-3121-310L	0055-3121-310R	0055-3321-310L	0055-3321-310R	1” BSPP	3/4” BSPP	1/2” BSPP

DUAL FLOW - ROTARY SIPHON PIPE

SHAFT SIZE			SEAL TYPE				B	C	J
			CARBON-SIC		SIC-SIC				
A		THREAD TYPE	STOCK CODE	STOCK CODE	STOCK CODE	STOCK CODE			
			LH	RH	LH	RH			
DN20	3/4”	3/4” NPT	0053-1121-107L	0053-1121-107R	0053-1321-107L	0053-1321-107R	3/4” NPT	1/2” NPT	1/2” NPT
		3/4” BSPP	0053-1121-307L	0053-1121-307R	0053-1321-307L	0053-1321-307R			
		3/4” BSPP	0053-3121-307L	0053-3121-307R	0053-3321-307L	0053-3321-307R	3/4” BSPP	1/2” BSPP	1/2” BSPP
DN25	1”	3/4” NPT	0055-1121-110L	0055-1121-110R	0055-1321-110L	0055-1321-110R	1” NPT	3/4” NPT	1/2” NPT
		3/4” BSPP	0055-1121-310L	0055-1121-310R	0055-1321-310L	0055-1321-310R			
		3/4” BSPP	0055-3121-310L	0055-3121-310R	0055-3321-310L	0055-3321-310R	1” BSPP	3/4” BSPP	1/2” BSPP

50 SERIES DUAL FLOW STATIONARY SIPHON PIPE

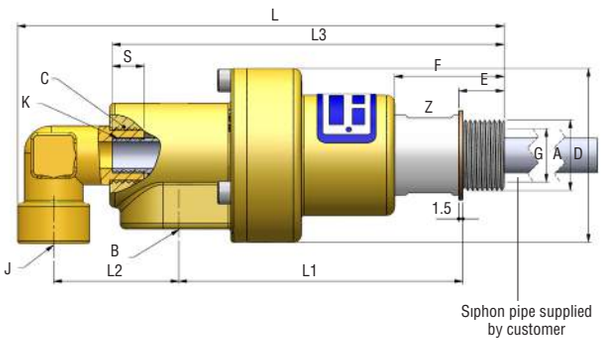

50 SERIES DUAL FLOW ROTARY SIPHON PIPE

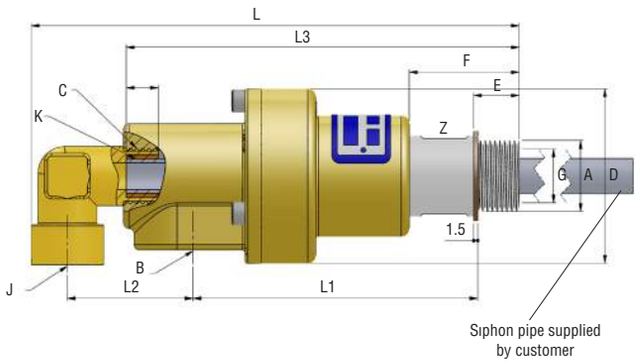

Z: 2x Wrench Flats

B	C	D	E	F	G	L1	L	Z	WEIGHT kg (lb)
3/4" NPT	1/2" NPT	65	17	41	20	108	148	28	1.5 (3.06)
3/4" BSPP	1/2" BSPP								
1" NPT	3/4" NPT	75	22	46.5	25	118	169	32	2.2 (4.49)
1" BSPP	3/4" BSPP								

K	D	E	F	G	L	L1	L2	L3	S	Z	WEIGHT kg (lb)
1/4" NPT	65	17	41	20	184.5	108	47.5	149	12	28	1.7 (3.47)
1/4" BSPP											
3/8" NPT	75	22	46.5	25	208	118	56	171.5	12	32	2.45 (5)
3/8" BSPP											

K	D	E	F	G	L	L1	L2	L3	S	Z	WEIGHT kg (lb)
Q12.8	65	17	41	20	184.5	108	47.5	149	12	28	1.7 (3.47)
Q15.8	75	22	46.5	25	208	118	56	171	12	32	2.45 (5)

50 SERIES SPARE PARTS

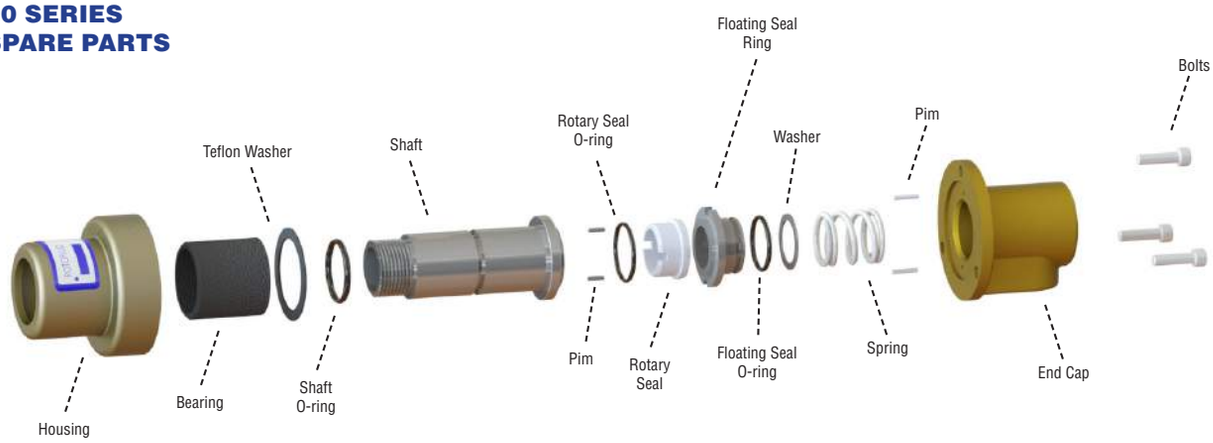

PART NAME	3/4”	1”
50 SERIES HOUSING	RY0100201005000	RY0100201006000
50 SERIES END CAP (NPT)	RY0110101107R00	RY0110101110R00
50 SERIES END CAP (BSPP)	RY0110101307R00	RY0110101310R00
SHAFT - BSPP -RH	RY01221307R0000	RY01221310R0000
SHAFT - BSPP - LH	RY01221307L0000	RY01221310L0000
SHAFT - NPT - RH	RY01221107R0000	RY01221110R0000
SHAFT - NPT - LH	RY01221107L0000	RY01221110L0000
BEARING	HD0100101001000	HD0100101002000
SHAFT O-RING	HD0170001021000	HD0170001012000
PTFE WASHER	HD0190106001000	HD0190106002000
SEAL RING - CARBON	HD0050101003000	HD0050101004000
SEAL RING - SIC	HD0050401003000	HD0050401004000
SEAL RING O-RING	HD0170001020000	HD0170001149000
SEAL PIM	HD0210201002000	HD0210201002000
FLOATING SEAL RING - CARBON	HD0050103003000	HD0050103004000
FLOATING SEAL RING - SIC	HD0050403003000	HD0050403004000
FLOATING SEAL O-RING	HD0170001005000	HD0170001006000
PIM	HD0210201003000	HD0210201003000
WASHER	HD0190102005000	HD0190102006000
SPRING	HD0150001011000	HD0150001012000
BOLT	HD0240201005000	HD0240201008000

100 SERIES

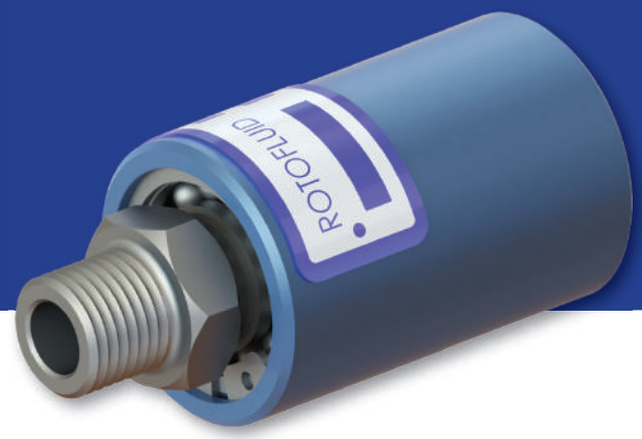

For AIR AND HYDRAULIC OIL
1/8" (DN06) - 1 1/2" (DN40)

- Self supported rotating joint
- Single flow joint
- Radial housing connection standard
- Straight models upon request
- Low torque
- Aluminium housing & steel shaft standart
- Stainless shaft upon request
- Light weight design

SEALS

Balanced mechanical seals
- Type 1 : Graphite Filled Teflon & Tool steel
- Type 2 : Carbon Graphite & Tool steel
- Type 3 : Carbon Graphite & Ceramic

Application Parameters

Max. Air Pressure	: 10 bar	150psi
Max. Vacuum	: 7 KPA	2"Hg
Max. Hydraulic Pressure	: 70 bar	1,050psi
Max. Speed	: 3500 RPM	3500 min-1
Max. Tempereture	: 120°C	250°F

Max. Hydraulic pressure changes according to speed

Avoid working with max. speed at max. pressure

For further information, please consult FACTORY, or your local distributor.

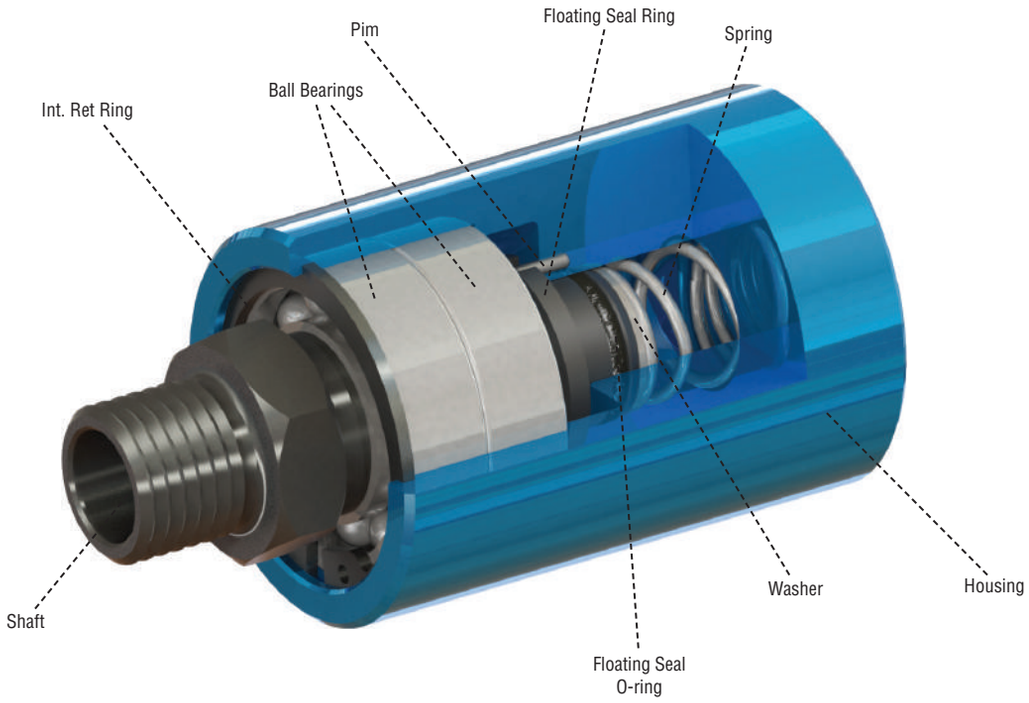

100 SERIES SINGLE FLOW

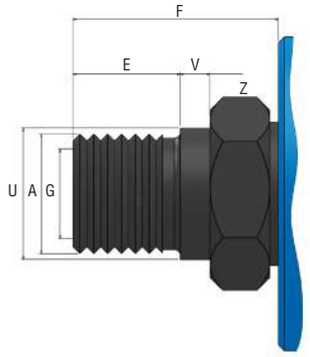

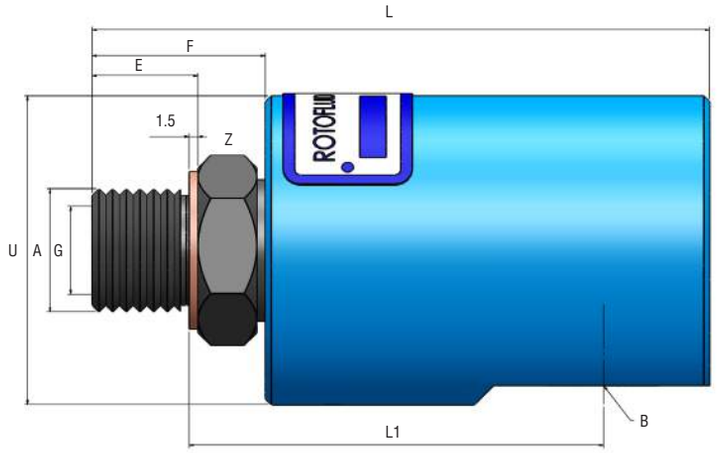

Z: 2x Wrench Flats

B		A	STOCK CODE LH	STOCK CODE RH	D	E	F	G	L1	L	U	V	Z	WEIGHT kg (lbs)
DN06	G 1/8”	G 1/8”	106-30-301L	106-30-301R	32	11	18	6	46	66.5	-	-	15	0.155 (0.31)
		M10 x 1	106-30-510L	106-30-510R	32	11	18	6	46	66.5	-	-	15	0.155 (0.31)
		PLOT M10 x 1	106-30-510PL	16-30-510PR	32	11	21	6	44.5	69.5	11 h6	3	15	0.135 (0.31)
DN08	G 1/4”	G 1/4”	108-30-302L	108-30-302R	37	13.5	21.5	8	47.5	70.5	-	-	17	0.185 (0.38)
DN10	G 3/8”	G 3/8”	110-30-303L	110-30-303R	39	14.5	24	10	56.5	83.5	-	-	22	0.310 (0.633)
		M 16 x 2	110-30-516L	110-30-516R	39	14.5	24	10	56.5	83.5	-	-	22	0.310 (0.633)
DN15	G 1/2”	G 1/2”	115-30-305L	115-30-305R	52.5	18	29.5	15	70.5	105	-	-	28	0.64 (1.31)
		PLOT M 20 x 1.5	115-30-520LP	115-30-520RP	52.5	18	34.5	15	69	110	22 g6	5	28	0.64 (1.31)
		PLOT M 27 x 1.5	115-30-527LP	115-30-527RP	52.5	18	35.5	15	69	111	28 g6	6	32	0.64 (1.31)
		M 35 x 1.5	120-30-535LO	120-30-535RO	58	20	33	20	78.5	119	-	-	40	0.795 (1.622)
		G 3/4”	120-30-307LO	120-30-307RO	58	20	33	20	78.5	119	-	-	36	0.795 (1.622)
DN20	G 3/4”	G 3/4”	120-30-307L	120-30-307R	58	20	33	20	78.5	119	-	-	36	0.795 (1.622)
		PLOT M 27 x 1.5	120-30-527LP	120-30-527LP	58	20	39	20	78.5	125	28 g6	6	36	0.795 (1.622)
		M 35 x 1.5	120-30-535L	120-30-535R	58	20	33	20	78.5	119	-	-	40	0.795 (1.622)
DN25	G 1”	G 1”	125-30-325L	125-30-325R	68	21	36.5	25	84.5	126	-	-	40	1.03 (2.1)
		PLOT M 35 x 1.5	125-30-535LP	125-30-535RP	68	21	48.5	25	84.5	138	40 g6	12	45	1.03 (2.1)
DN32	G 1 1/4”	G 1 1/4”	132-30-332L	132-30-332R	82	23	43	32	106.5	159	-	-	50	1.75 (3.57)
DN40	G 1 1/2”	G 1 1/2”	140-30-340L	140-30-340R	96	23	48	40	123.5	180	-	-	60	3 (6.12)
		M 50 x 1.5	140-30-550L	140-30-550R	96	23	48	40	123.5	180	-	-	60	3 (6.12)

100 SERIES
SPARE PARTS

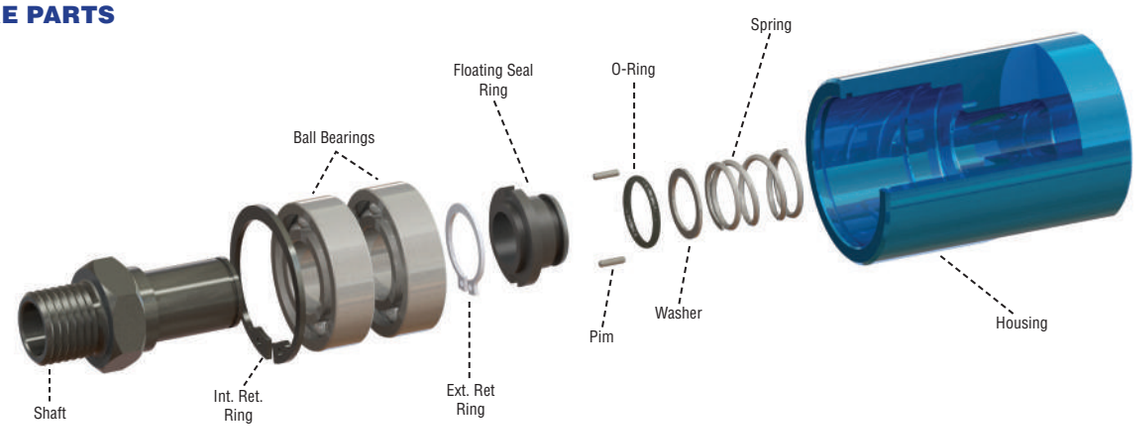

PART NAME	1/8"	1/4"	3/8"	1/2"	3/4"	1"	1 1/4"	1 1/2"
HOUSING (BSPP)	RY0010003301R00	RY0010003302R00	RY0010003303R00	RY0010003305R00	RY0010003307R00	RY0010003310R00	RY0010003312R00	RY0010003315R00
HOUSING (NPT)	RY0010003101R00	RY0010003102R00	RY0010003103R00	RY0010003105R00	RY0010003107R00	RY0010003110R00	RY0010003112R00	RY0010003115R00
SHAFT (BSPP RH)	RY0020003301R00	RY0000003302R00	RY0020003303R00	RY0020003305R00	RY0020003307R00	RY0020003310R00	RY0020003312R00	RY0020003315R00
SHAFT (BSPP LH)	RY0020003301L00	RY0000003302L00	RY0020003303L00	RY0020003305L00	RY0020003307L00	RY0020003310L00	RY0020003312L00	RY0020003315L00
SHAFT (NPT RH)	RY0020003101R00	RY0000003102R00	RY0020003103R00	RY0020003105R00	RY0020003107R00	RY0020003110R00	RY0020003112R00	RY0020003115R00
SHAFT (NPT RH)	RY0020003101L00	RY0000003102L00	RY0020003103L00	RY0020003105L00	RY0020003107L00	RY0020003110L00	RY0020003112L00	RY0020003115L00
SHAFT (M10x1 RH)	RY0020003510R00	-	-	-	-	-	-	-
SHAFT (M10x1 LH)	RY0020003510L00	-	-	-	-	-	-	-
SHAFT (PLOT M10x1 RH)	RY0020003510R01	-	-	-	-	-	-	-
SHAFT (PLOT M10x1 LH)	RY0020003510L01	-	-	-	-	-	-	-
SHAFT (M16x2 RH)	-	-	RY0020003516R00	-	-	-	-	-
SHAFT (M16x2 LH)	-	-	RY0020003516L00	-	-	-	-	-
SHAFT (PLOT M20x1.5 RH)	-	-	-	RY0020003520R01	-	-	-	-
SHAFT (PLOT M20x1.5 LH)	-	-	-	RY0020003520L01	-	-	-	-
SHAFT (PLOT M27x1.5 RH)	-	-	-	RY0020003527R01	RY0020003527R01	-	-	-
SHAFT (PLOT M27x1.5 LH)	-	-	-	RY0020003527L01	RY0020003527L01	-	-	-
SHAFT (M35x1.5 RH)	-	-	-	RY0020003535R00	RY0020003535R00	RY0020003535R00	-	-
SHAFT (M35x1.5 LH)	-	-	-	RY0020003535L00	RY0020003535L00	RY0020003535L00	-	-
SHAFT (PLOT M35x1.5 RH)	-	-	-	-	RY0020003535R01	RY0020003535R01	-	-
SHAFT (PLOT M35x1.5 LH)	-	-	-	-	RY0020003535L01	RY0020003535L01	-	-
SHAFT (M50x1.5 RH)	-	-	-	-	-	-	-	RY0020003550R00
SHAFT (M50x1.5 LH)	-	-	-	-	-	-	-	RY0020003550L00
BALL BEARING	HD0160003001000	HD0160003002000	HD0160003003000	HD0160003005000	HD0160003006000	HD0160003007000	HD0160003009000	HD0160003011000
EXT. RET. RING	HD0180101001000	HD0180101003000	HD0180101005000	HD0180101007000	HD0180101008000	HD0180101010000	HD0180101012000	HD0180101014000
INT. RET. RING	HD0180201003000	HD0180201004000	HD0180201006000	HD0180201009000	HD0180201011000	HD0180201015000	HD0180201020000	HD0180201023000
SEAL RING	HD0050600001000	HD0050600002000	HD0050600003000	HD0050600004000	HD0050600005000	HD0050600006000	HD0050600007000	HD0050600008000
O-RING	HD0170001001000	HD0170001002000	HD0170001003000	HD0170001004000	HD0170001005000	HD0170001006000	HD0170001007000	HD0170001008000
WASHER	HD0190002001000	HD0190002002000	HD0190002003000	HD0190002004000	HD0190002005000	HD0190002006000	HD0190002007000	HD0190002008000
SPRING	HD0150001001000	HD0150001002000	HD0150001003000	HD0150001004000	HD0150001005000	HD0150001006000	HD0150001007000	HD0150001008000

200/200HO SERIES

For STEAM, HOT OIL, WATER
1/2" (DN15) – 2" (DN50)

- Single and dual flow
- Self supported rotating joint
- Cast iron housing
- Stainless steel shaft
- Torque lugs on housing
- Seal wear indicator on shaft

Application Parameters

Max. Steam Pressure	: 17 bar	250psi
Max. Steam Tempereture	: 200°C	400°F
Max. Hot Oil Pressure*	: 10 bar	150psi
Max. Hot Oil Temperature*	: 315°C	600°F
Max. Speed	: 400 RPM	400 min^{-1}

**Only for 200 HO Models*

Avoid working with max. speed at max. pressure

For further information, please consult FACTORY, or your local representative.

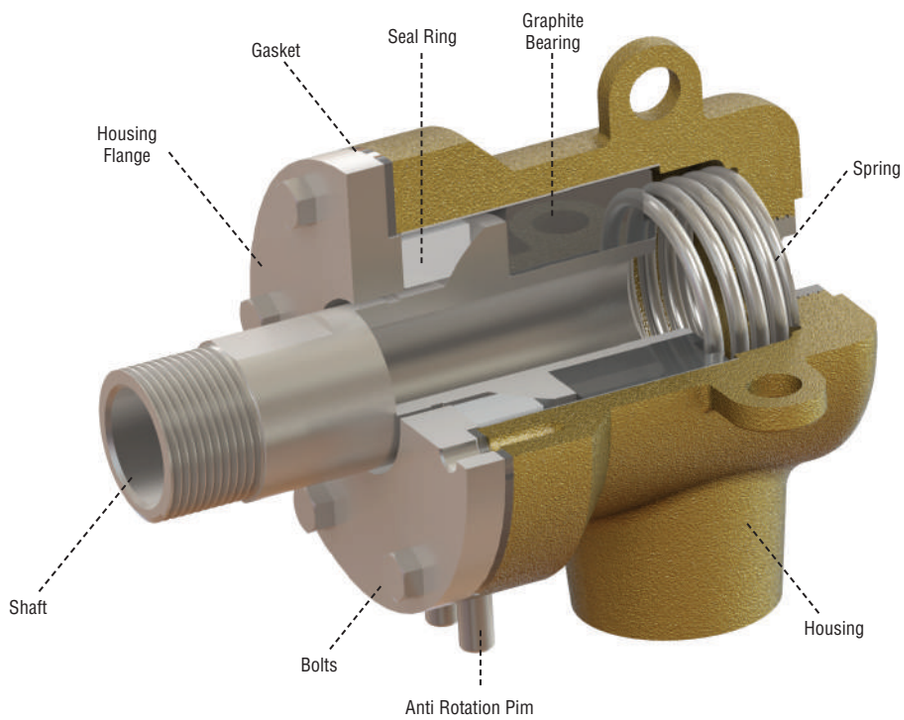

200 SERIES SINGLE FLOW

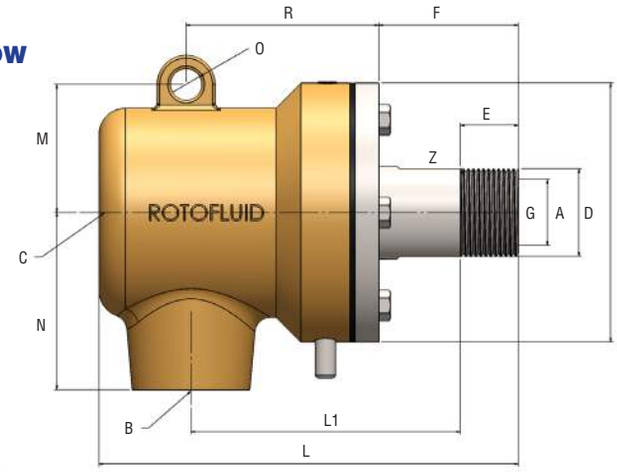

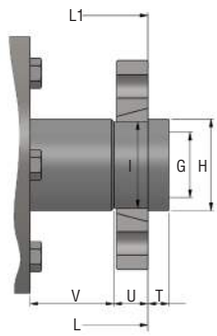

Z: 2x Wrench Flats

Single flow joints are used when supply and return lines are connected to opposite sides of the cylinder.

SHAFT SIZE			SEAL TYPE		B	C	D	E	F	G	H	I	L	L1	M	N	O	R	T	U	V	Z	WEIGHT kg (lb)
A		THREAD TYPE	200 STOCK CODE	200HO STOCK CODE																			
DN15	1/2"	1/2" NPT RH	205-110-105R	205-115-105R	1/2" NPT	3/8" NPT	83	17	44	15	-	-	128	85	42.5	52.5	12	55.5	-	-	-	22	2.25 (4.60)
		1/2" NPT LH	205-110-105L	205-115-105L																			
		1/2" BSP RH	205-310-205R	205-315-205R	1/2" BSPP	3/8" BSPP																	
		1/2" BSP LH	205-310-205L	205-315-205L																			
		1/2" QR	205-310-0010	205-315-0010							24	22	123	97					6	11	27	-	
		1/2" QR/1	205-310-0020	205-315-0020							20.7	20	119	93					9.5	16	18		
DN20	3/4"	3/4" NPT RH	207-110-107R	207-115-107R	3/4" NPT	1/2" NPT	88.5	19	48	20	-	-	143	92,5	45	60	12	66	-	-	-	27	2.75 (5.6)
		3/4" NPT LH	207-110-107L	207-115-107L																			
		3/4" BSP RH	207-310-207R	207-315-207R	3/4" BSPP	1/2" BSPP																	
		3/4" BSP LH	207-310-207L	207-315-207L																			
		3/4" QR	207-310-0010	207-315-0010							30	28	135	104.5					8	13	27	-	
		3/4" QR/1	207-310-0020	207-315-0020							26	25	132	101					11.1	17	20		
DN25	1"	1" NPT RH	210-110-110R	210-115-110R	1" NPT	3/4" NPT	98	22	53	25	-	-	159	102	48.5	67	12	73	-	-	-	33	3.25 (6.64)
		1" NPT LH	210-110-110L	210-115-110L																			
		1" BSP RH	210-310-210R	210-315-210R	1" BSPP	3/4" BSPP																	
		1" BSP LH	210-310-210L	210-315-210L																			
		1" QR	210-310-0010	210-315-0010							35	33	151	116					8	13	32	-	
		1" QR/1	210-310-0020	210-315-0020							32.5	31	148	113					11.1	17	25		
DN32	1 1/4"	1 1/4" NPT RH	212-110-112R	212-115-112R	1 1/4" NPT	1" NPT	108	22	58	32	-	-	180.5	117	57	76	15	76.5	-	-	-	42	5 (10.2)
		1 1/4" NPT LH	212-110-112L	212-115-112L																			
		1 1/4" BSP RH	212-310-212R	212-315-212R	1 1/4" BSPP	1" BSPP																	
		1 1/4" BSP LH	212-310-212L	212-315-212L																			
		1 1/4" QR	212-310-0010	212-315-0010							45	43	172.5	129.5					8	13	37	-	
		1 1/4" QR/1	212-310-0020	212-315-0020							41.3	39.5	168	125					12.7	19	26		
DN40	1 1/2"	1 1/2" NPT RH	215-110-115R	215-115-115R	1 1/2" NPT	1 1/4" NPT	138	22	67	40	-	-	207	139	69.5	89	15	98.5	-	-	-	48	6.5 (13.2)
		1 1/2" NPT LH	215-110-115L	215-115-115L																			
		1 1/2" BSP RH	215-310-215R	215-315-215R	1 1/2" BSPP	1 1/4" BSPP																	
		1 1/2" BSP LH	215-310-215L	215-315-215L																			
		1 1/2" QR	215-310-0010	215-315-0010							50	48	197	152					10	16	41	-	
		1 1/2" QR/1	215-310-0020	215-315-0020							47.6	45	194	149					12.7	22	32.5		
DN50	2"	2" NPT RH	220-110-120R	220-115-120R	2" NPT	1 1/2" NPT	158	27	72	50	-	-	237	152.5	81	102	16	114	-	-	-	62	12 (26.5)
		2" NPT LH	220-110-120L	220-115-120L																			
		2" BSP RH	220-310-220R	220-315-220R	2" BSPP	1 1/2" BSPP																	
		2" BSP LH	220-310-220L	220-315-220L																			
		2" QR	220-310-0010	220-315-0010							65	63	227	170					10	16	46	-	
		2" QR/1	220-310-0020	220-315-0020							59.1	57	221	164					15.9	22	34		

200 SERIES DUAL FLOW STATIONARY SIPHON PIPE

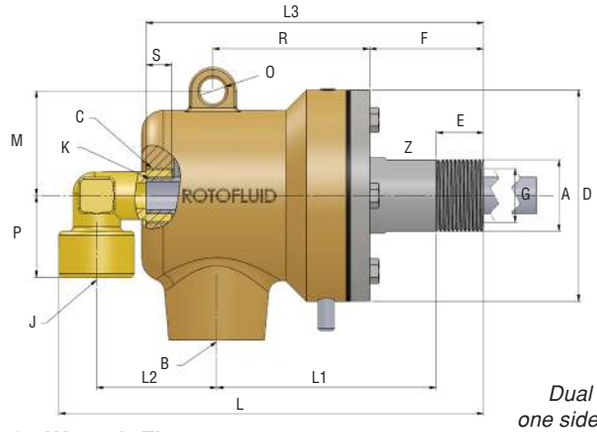

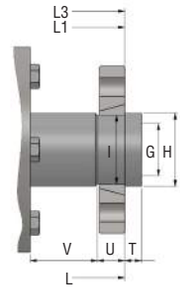

Z: 2x Wrench Flats

Dual flow joints are used when supply and return lines are connected to one side of the cylinder. Divided siphon pipes must be used when speed is higher than 1000 RPM and siphon pipe is longer than 4xL.

SHAFT SIZE			SEAL TYPE		B	C	J	K	D	E	F	G	H	I	L	L1	L2	L3	M	N	O	P	R	S	T	U	V	Z	WEIGHT kg (lb)
A		THREAD TYPE	200 STOCK CODE	200HO STOCK CODE																									
DN15	1/2"	1/2" NPT RH	205-110-105R	205-115-105R	1/2 NPT	3/8" NPT	3/8" NPT	1/8" NPT	83	17	44	15	-	-	156	85	42.5	125	42.5	52.5	12	31.5	55.5	9	-	-	-	22	2.4 (4.9)
		1/2" NPT LH	205-110-105L	205-115-105L																									
		1/2" BSP RH	205-310-205R	205-315-205R	1/2" BSPP	3/8" BSPP	3/8" BSPP	1/8" BSPP																					
		1/2" BSP LH	205-310-205L	205-315-205L																									
		1/2" QR	205-310-0010	205-315-0010									24	22	150	97		119							6	11	27	-	
		1/2" QR/1	205-310-0020	205-315-0020									20.7	20	147	93		116							9.5	16	18		
DN20	3/4"	3/4" NPT RH	207-110-107R	207-115-107R	3/4" NPT	1/2" NPT	1/2" NPT	1/4" NPT	88.5	19	48	20	-	-	176	92.5	50	140.5	45	60	12	33	66	12	-	-	-	27	2.9 (5.9)
		3/4" NPT LH	207-110-107L	207-115-107L																									
		3/4" BSP RH	207-310-207R	207-315-207R	3/4" BSPP	1/2" BSPP	1/2" BSPP	1/4" BSPP																					
		3/4" BSP LH	207-310-207L	207-315-207L																									
		3/4" QR	207-310-0010	207-315-0010									30	28	168	104.5		132.5							8	13	27	-	
		3/4" QR/1	207-310-0020	207-315-0020									26	25	165	101		129.5							11.1	17	20		
DN25	1"	1" NPT RH	210-110-110R	210-115-110R	1" NPT	3/4" NPT	1/2" NPT	3/8" NPT	98	22	53	25	-	-	194	102	56	157	48.5	67	12	38	73	12	-	-	-	33	3.45 (7.05)
		1" NPT LH	210-110-110L	210-115-110L																									
		1" BSP RH	210-310-210R	210-315-210R	1" BSPP	3/4" BSPP	1/2" BSPP	3/8" BSPP																					
		1" BSP LH	210-310-210L	210-315-210L																									
		1" QR	210-310-0010	210-315-0010									35	33	186	116		149							8	13	32	-	
		1" QR/1	210-310-0020	210-315-0020									32.5	31	183	113		146							11.1	17	25		
DN32	1 1/4"	1 1/4" NPT RH	212-110-112R	212-115-112R	1 1/4" NPT	1" NPT	3/4" NPT	1/2" NPT	108	22	58	32	-	-	223	117	68	176.5	57	76	15	38	76.5	12	-	-	-	42	5.25 (10.7)
		1 1/4" NPT LH	212-110-112L	212-115-112L																									
		1 1/4" BSP RH	212-310-212R	212-315-212R	1 1/4" BSPP	1" BSPP	3/4" BSPP	1/2" BSPP																					
		1 1/4" BSP LH	212-310-212L	212-315-212L																									
		1 1/4" QR	212-310-0010	212-315-0010									45	43	215	129.5		168.5							8	13	37	-	
		1 1/4" QR/1	212-310-0020	212-315-0020									41.3	39.5	210	125		163.5							12.7	19	26		
DN40	1 1/2"	1 1/2" NPT RH	215-110-115R	215-115-115R	1 1/2" NPT	1 1/4" NPT	3/4" NPT	3/4" NPT	138	22	67	40	-	-	261	139	77.5	207	69.5	89	15	45	98.5	18	-	-	-	48	6.8 (13.9)
		1 1/2" NPT LH	215-110-115L	215-115-115L																									
		1 1/2" BSP RH	215-310-215R	215-315-215R	1 1/2" BSPP	1 1/4" BSPP	3/4" BSPP	3/4" BSPP																					
		1 1/2" BSP LH	215-310-215L	215-315-215L																									
		1 1/2" QR	215-310-0010	215-315-0010									50	48	251	152		197							10	16	41	-	
		1 1/2" QR/1	215-310-0020	215-315-0020									47.6	45	248	149		194							12.7	22	32.5		
DN50	2"	2" NPT RH	220-110-120R	220-115-120R	2" NPT	1 1/2" NPT	1 1/4" NPT	1" NPT	158	27	72	50	-	-	291	152.5	87	234	81	102	16	45	114	18	-	-	-	62	12.5 (25.5)
		2" NPT LH	220-110-120L	220-115-120L																									
		2" BSP RH	220-310-220R	220-315-220R	2" BSPP	1 1/2" BSPP	1 1/4" BSPP	1" BSPP																					
		2" BSP LH	220-310-220L	220-315-220L																									
		2" QR	220-310-0010	220-315-0010									65	63	281	170		224							10	16	46	-	
		2" QR/1	220-310-0020	220-315-0020									59.1	57	275	164		218							15.9	22	34		

200 SERIES DUAL FLOW ROTARY SIPHON PIPE

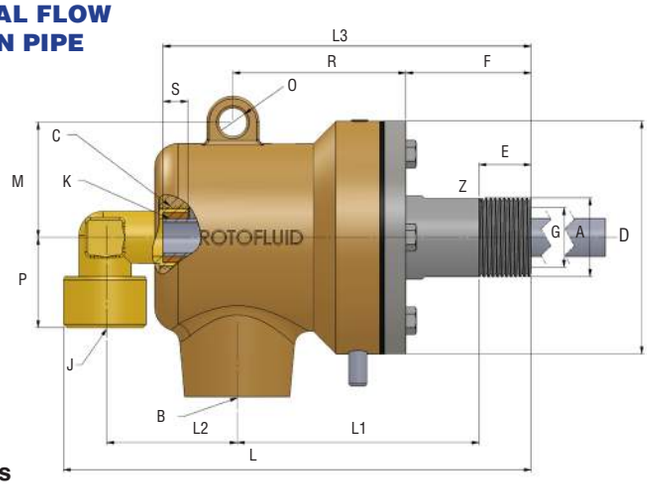

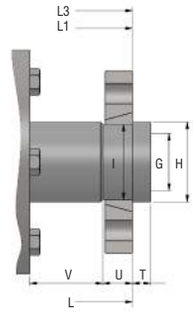

Z: 2x Wrench Flats

SHAFT SIZE			SEAL TYPE		B	C	J	K	D	E	F	G	H	I	L	L1	L2	L3	M	N	O	P	R	S	T	U	V	Z	WEIGHT kg (lb)
A		THREAD TYPE	200 STOCK CODE	200HO STOCK CODE																									
DN15	1/2"	1/2" NPT RH	205-110-105R	205-115-105R	1/2" NPT	3/8" NPT	3/8" NPT	Q9.8	83	17	44	15	-	-	156	85	42.5	125	42.5	52.5	12	31.5	55.5	9	-	-	-	22	2.4 (4.9)
		1/2" NPT LH	205-110-105L	205-115-105L																									
		1/2" BSP RH	205-310-205R	205-315-205R	1/2" BSPP	3/8" BSPP	3/8" BSPP																						
		1/2" BSP LH	205-310-205L	205-315-205L																									
		1/2" QR	205-310-0010	205-315-0010									24	22	150	97		119							6	11	27	-	
		1/2" QR/1	205-310-0020	205-315-0020									20.7	20	147	93		116							9.5	16	18		
DN20	3/4"	3/4" NPT RH	207-110-107R	207-115-107R	3/4" NPT	1/2" NPT	1/2" NPT	Q12.8	88.5	19	48	20	-	-	176	92.5	50	140.5	45	60	12	33	66	12	-	-	-	27	2.9 (5.9)
		3/4" NPT LH	207-110-107L	207-115-107L																									
		3/4" BSP RH	207-310-207R	207-315-207R	3/4" BSPP	1/2" BSPP	1/2" BSPP																						
		3/4" BSP LH	207-310-207L	207-315-207L																									
		3/4" QR	207-310-0010	207-315-0010									30	28	168	104.5		132.5							8	13	27	-	
		3/4" QR/1	207-310-0020	207-315-0020									26	25	165	101		129.5							11.1	17	20		
DN25	1"	1" NPT RH	210-110-110R	210-115-110R	1" NPT	3/4" NPT	1/2" NPT	Q15.8	98	22	53	25	-	-	194	102	56	157	48.5	67	12	38	73	12	-	-	-	33	3.45 (7.05)
		1" NPT LH	210-110-110L	210-115-110L																									
		1" BSP RH	210-310-210R	210-315-210R	1" BSPP	3/4" BSPP	1/2" BSPP																						
		1" BSP LH	210-310-210L	210-315-210L																									
		1" QR	210-310-0010	210-315-0010									35	33	186	116		149							8	13	32	-	
		1" QR/1	210-310-0020	210-315-0020									32.5	31	183	113		146							11.1	17	25		
DN32	1 1/4"	1 1/4" NPT RH	212-110-112R	212-115-112R	1 1/4" NPT	1" NPT	3/4" NPT	Q21.8	108	22	58	32	-	-	223	117	68	176.5	57	76	15	38	76.5	12	-	-	-	42	5.25 (10.7)
		1 1/4" NPT LH	212-110-112L	212-115-112L																									
		1 1/4" BSP RH	212-310-212R	212-315-212R	1 1/4" BSPP	1" BSPP	3/4" BSPP																						
		1 1/4" BSP LH	212-310-212L	212-315-212L																									
		1 1/4" QR	212-310-0010	212-315-0010									45	43	215	129.5		168.5							8	13	37	-	
		1 1/4" QR/1	212-310-0020	212-315-0020									41.3	39.5	210	125		163.5							12.7	19	26		
DN40	1 1/2"	1 1/2" NPT RH	215-110-115R	215-115-115R	1 1/2" NPT	1 1/4" NPT	3/4" NPT	Q25.8	138	22	67	40	-	-	261	139	77.5	207	69.5	89	15	45	98.5	18	-	-	-	48	6.8 (13.9)
		1 1/2" NPT LH	215-110-115L	215-115-115L																									
		1 1/2" BSP RH	215-310-215R	215-315-215R	1 1/2" BSPP	1 1/4" BSPP	3/4" BSPP																						
		1 1/2" BSP LH	215-310-215L	215-315-215L																									
		1 1/2" QR	215-310-0010	215-315-0010									50	48	251	152		197							10	16	41	-	
		1 1/2" QR/1	215-310-0020	215-315-0020									47.6	45	248	149		194							12.7	22	32.5		
DN50	2"	2" NPT RH	220-110-120R	220-115-120R	2" NPT	1 1/2" NPT	1 1/4" NPT	Q32.1	158	27	72	50	-	-	291	152.5	87	234	81	102	16	45	114	18	-	-	-	62	12.5 (25.5)
		2" NPT LH	220-110-120L	220-115-120L																									
		2" BSP RH	220-310-220R	220-315-220R	2" BSPP	1 1/2" BSPP	1 1/4" BSPP																						
		2" BSP LH	220-310-220L	220-315-220L																									
		2" QR	220-310-0010	220-315-0010									65	63	281	170		224							10	16	46	-	
		2" QR/1	220-310-0020	220-315-0020									59.1	57	275	164		218							15.9	22	34		

200 SERIES FLANGED CONNECTIONS SINGLE FLOW

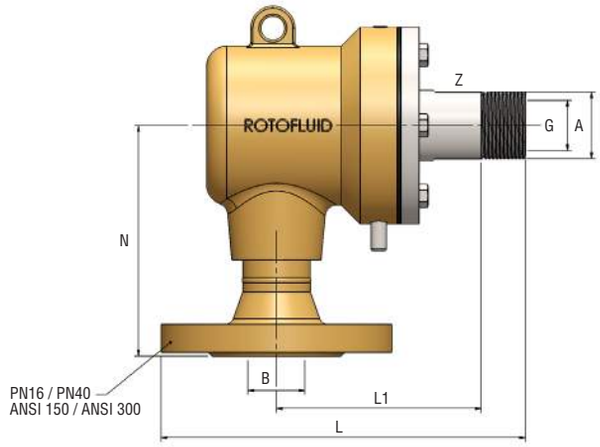

Z: 2x Wrench Flats

SHAFT SIZE			SEAL TYPE								B	G	L	L1	N	Z	WEIGHT kg (lb)
A		THREAD TYPE	200				200HO										
			LH	RH	QR	QR/1	LH	RH	QR	QR/1							
DN15	1/2"	1/2" NPT	205-610-105L	205-610-105R	205-610-0010	205-610-0020	205-615-105L	205-615-105R	205-615-0010	205-615-0020	ANSI150 FLG	15	137	85	95	22	3 (6.60)
			205-710-105L	205-710-105R	205-710-0010	205-710-0020	205-715-105L	205-715-105R	205-715-0010	205-715-0020	ANSI300 FLG						
		1/2" BSP	205-410-205L	205-410-205R	205-410-0010	205-410-0020	205-415-205L	205-415-205R	205-415-0010	205-415-0020	PN16 FLG						
			205-510-205L	205-510-205R	205-510-0010	205-510-0020	205-515-205L	205-515-205R	205-515-0010	205-515-0020	PN40 FLG						
DN20	3/4"	3/4" NPT	207-610-107L	207-610-107R	207-610-0010	207-610-0020	207-615-107L	207-615-107R	207-615-0010	207-615-0020	ANSI150 FLG	20	164	92.5	110	27	3.8 (8.4)
			207-710-107L	207-710-107R	207-710-0010	207-710-0020	207-715-107L	207-715-107R	207-715-0010	207-715-0020	ANSI300 FLG						
		3/4" BSP	207-410-207L	207-410-207R	207-410-0010	207-410-0020	207-415-207L	207-415-207R	207-415-0010	207-415-0020	PN16 FLG						
			207-510-207L	207-510-207R	207-510-0010	207-510-0020	207-515-207L	207-515-207R	207-515-0010	207-515-0020	PN40 FLG						
DN25	1"	1" NPT	210-610-110L	210-610-110R	210-610-0010	210-610-0020	210-615-110L	210-615-110R	210-615-0010	210-615-0020	ANSI150 FLG	25	181.5	102	115	33	4.6 (10.12)
			210-710-110L	210-710-110R	210-710-0010	210-710-0020	210-715-110L	210-715-110R	210-715-0010	210-715-0020	ANSI300 FLG						
		1" BSP	210-410-210L	210-410-210R	210-410-0010	210-410-0020	210-415-210L	210-415-210R	210-415-0010	210-415-0020	PN16 FLG						
			210-510-210L	210-510-210R	210-510-0010	210-510-0020	210-515-210L	210-515-210R	210-515-0010	210-515-0020	PN40 FLG						
DN32	1 1/4"	1 1/4" NPT	212-610-112L	212-610-112R	212-610-0010	212-610-0020	212-615-112L	212-615-112R	212-615-0010	212-615-0020	ANSI150 FLG	32	209	117	125	42	14.85 (10.2)
			212-710-112L	212-710-112R	212-710-0010	212-710-0020	212-715-112L	212-715-112R	212-715-0010	212-715-0020	ANSI300 FLG						
		1 1/4" BSP	212-410-212L	212-410-212R	212-410-0010	212-410-0020	212-415-212L	212-415-212R	212-415-0010	212-415-0020	PN16 FLG						
			212-510-212L	212-510-212R	212-510-0010	212-510-0020	212-515-212L	212-515-212R	212-515-0010	212-515-0020	PN40 FLG						
DN40	1 1/2"	1 1/2" NPT	215-610-115L	215-610-115R	215-610-0010	215-610-0020	215-615-115L	215-615-115R	215-615-0010	215-615-0020	ANSI150 FLG	40	236	139	140	48	19.7 (13.2)
			215-710-115L	215-710-115R	215-710-0010	215-710-0020	215-715-115L	215-715-115R	215-715-0010	215-715-0020	ANSI300 FLG						
		1 1/2" BSP	215-410-215L	215-410-215R	215-410-0010	215-410-0020	215-415-215L	215-415-215R	215-415-0010	215-415-0020	PN16 FLG						
			215-510-215L	215-510-215R	215-510-0010	215-510-0020	215-515-215L	215-515-215R	215-515-0010	215-515-0020	PN40 FLG						
DN50	2"	2" NPT	220-610-120L	220-610-120R	220-610-0010	220-610-0020	220-615-120L	220-615-120R	220-615-0010	220-615-0020	ANSI150 FLG	50	257	152.5	160	62	14.9 (32.78)
			220-710-120L	220-710-120R	220-710-0010	220-710-0020	220-715-120L	220-715-120R	220-715-0010	220-715-0020	ANSI300 FLG						
		2" BSP	220-410-220L	220-410-220R	220-410-0010	220-410-0020	220-415-220L	220-415-220R	220-415-0010	220-415-0020	PN16 FLG						
			220-510-220L	220-510-220R	220-510-0010	220-510-0020	220-515-220L	220-515-220R	220-515-0010	220-515-0020	PN40 FLG						

200 SERIES
FLANGED CONNECTIONS
STATIONARY SIPHON PIPE

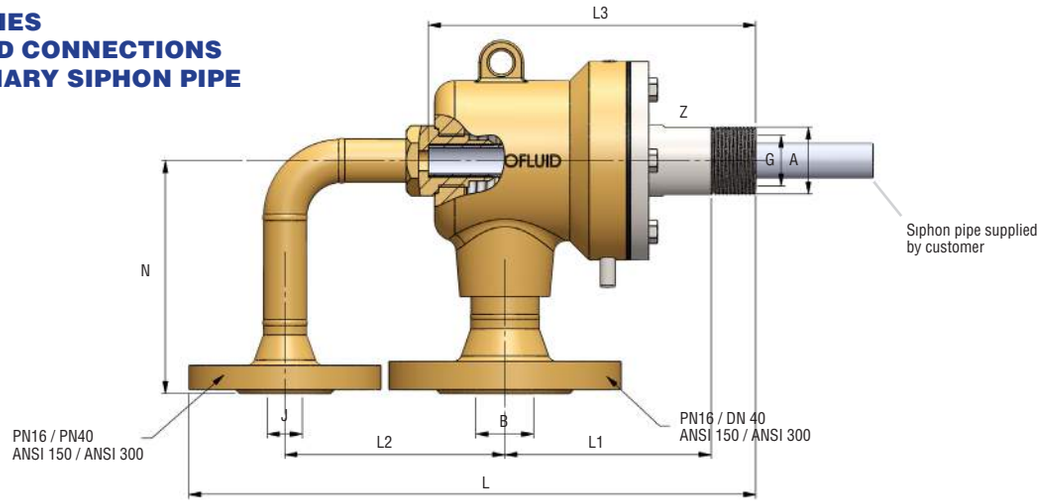

SHAFT SIZE			SEAL TYPE								B	J	G	L	L1	L2	L3	N	Z	WEIGHT kg (lb)
A		THREAD TYPE	200				200HO													
			LH	RH	QR	QR/1	LH	RH	QR	QR/1										
DN15	1/2"	1/2" NPT	205-610-105L	205-610-105R	205-610-0010	205-610-0020	205-615-105L	205-615-105R	205-615-0010	205-615-0020	DN15 ANSI150	DN10 ANSI150	15	238	85	101	132	95	22	4 (8.80)
			205-710-105L	205-710-105R	205-710-0010	205-710-0020	205-715-105L	205-715-105R	205-715-0010	205-715-0020	DN15 ANSI300	DN10 ANSI300								
		1/2" BSP	205-410-205L	205-410-205R	205-410-0010	205-410-0020	205-415-205L	205-415-205R	205-415-0010	205-415-0020	DN15 PN16	DN10 PN16								
			205-510-205L	205-510-205R	205-510-0010	205-510-0020	205-515-205L	205-515-205R	205-515-0010	205-515-0020	DN15 PN40	DN10 PN40								
DN20	3/4"	3/4" NPT	207-610-107L	207-610-107R	207-610-0010	207-610-0020	207-615-107L	207-615-107R	207-615-0010	207-615-0020	DN20 ANSI150	DN15 ANSI150	20	247.5	92.5	101	147	110	27	4.8 (10.56)
			207-710-107L	207-710-107R	207-710-0010	207-710-0020	207-715-107L	207-715-107R	207-715-0010	207-715-0020	DN20 ANSI300	DN15 ANSI300								
		3/4" BSP	207-410-207L	207-410-207R	207-410-0010	207-410-0020	207-415-207L	207-415-207R	207-415-0010	207-415-0020	DN20 PN16	DN15 PN16								
			207-510-207L	207-510-207R	207-510-0010	207-510-0020	207-515-207L	207-515-207R	207-515-0010	207-515-0020	DN20 PN40	DN15 PN40								
DN25	1"	1" NPT	210-610-110L	210-610-110R	210-610-0010	210-610-0020	210-615-110L	210-615-110R	210-615-0010	210-615-0020	DN25 ANSI150	DN15 ANSI150	25	265	102	106	164	115	33	5.8 (12.76)
			210-710-110L	210-710-110R	210-710-0010	210-710-0020	210-715-110L	210-715-110R	210-715-0010	210-715-0020	DN25 ANSI300	DN15 ANSI300								
		1" BSP	210-410-210L	210-410-210R	210-410-0010	210-410-0020	210-415-210L	210-415-210R	210-415-0010	210-415-0020	DN25 PN16	DN15 PN16								
			210-510-210L	210-510-210R	210-510-0010	210-510-0020	210-515-210L	210-515-210R	210-515-0010	210-515-0020	DN25 PN40	DN15 PN40								
DN32	1 1/4"	1 1/4" NPT	212-610-112L	212-610-112R	212-610-0010	212-610-0020	212-615-112L	212-615-112R	212-615-0010	212-615-0020	DN32 ANSI150	DN20 ANSI150	32	314.5	117	123	191.5	125	42	16 (35.2)
			212-710-112L	212-710-112R	212-710-0010	212-710-0020	212-715-112L	212-715-112R	212-715-0010	212-715-0020	DN32 ANSI300	DN20 ANSI300								
		1 1/4" BSP	212-410-212L	212-410-212R	212-410-0010	212-410-0020	212-415-212L	212-415-212R	212-415-0010	212-415-0020	DN32 PN16	DN20 PN16								
			212-510-212L	212-510-212R	212-510-0010	212-510-0020	212-515-212L	212-515-212R	212-515-0010	212-515-0020	DN32 PN40	DN20 PN40								
DN40	1 1/2"	1 1/2" NPT	215-610-115L	215-610-115R	215-610-0010	215-610-0020	215-615-115L	215-615-115R	215-615-0010	215-615-0020	DN40 ANSI150	DN25 ANSI150	40	351.5	139	133	224.5	140	48	21 (46.2)
			215-710-115L	215-710-115R	215-710-0010	215-710-0020	215-715-115L	215-715-115R	215-715-0010	215-715-0020	DN40 ANSI300	DN25 ANSI300G								
		1 1/2" BSP	215-410-215L	215-410-215R	215-410-0010	215-410-0020	215-415-215L	215-415-215R	215-415-0010	215-415-0020	DN40 PN16	DN25 PN16								
			215-510-215L	215-510-215R	215-510-0010	215-510-0020	215-515-215L	215-515-215R	215-515-0010	215-515-0020	DN40 PN40	DN25 PN40								
DN50	2"	2" NPT	220-610-120L	220-610-120R	220-610-0010	220-610-0020	220-615-120L	220-615-120R	220-615-0010	220-615-0020	DN50 ANSI150	DN32 ANSI150	50	402.5	152.5	153	257	160	62	17.5 (38.5)
			220-710-120L	220-710-120R	220-710-0010	220-710-0020	220-715-120L	220-715-120R	220-715-0010	220-715-0020	DN50 ANSI300	DN32 ANSI300								
		2" BSP	220-410-220L	220-410-220R	220-410-0010	220-410-0020	220-415-220L	220-415-220R	220-415-0010	220-415-0020	DN50 PN16	DN32 PN16								
			220-510-220L	220-510-220R	220-510-0010	220-510-0020	220-515-220L	220-515-220R	220-515-0010	220-515-0020	DN50 PN40	DN32 PN40								

200 SERIES
FLANGED CONNECTIONS
ROTARY SIPHON PIPE

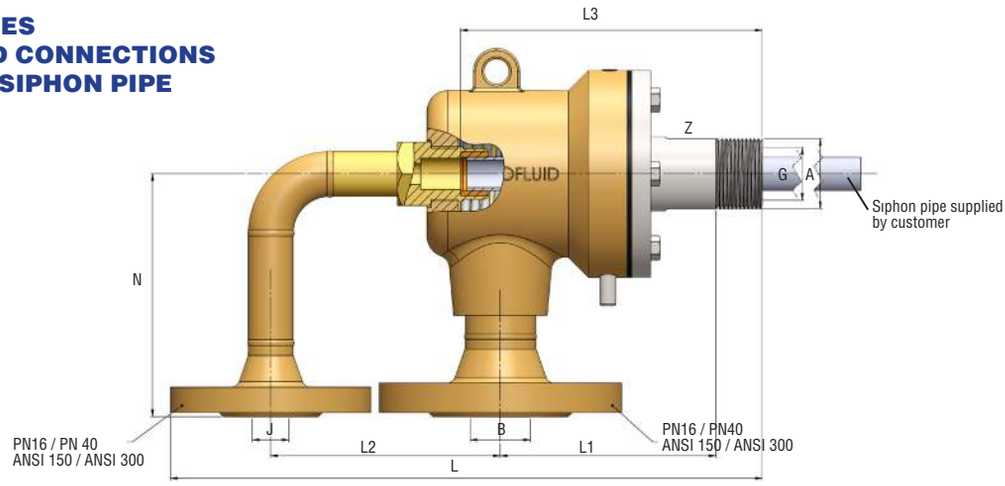

SHAFT SIZE			SEAL TYPE								B	J	G	L	L1	L2	L3	N	Z	WEIGHT kg (lb)
A		THREAD TYPE	200				200HO													
			LH	RH	QR	QR/1	LH	RH	QR	QR/1										
DN15	1/2"	1/2" NPT	205-610-105L	205-610-105R	205-610-0010	205-610-0020	205-615-105L	205-615-105R	205-615-0010	205-615-0020	DN15 ANSI150 FLG	DN10 ANSI150 FLG	15	238	85	101	132	95	22	4 (8.80)
			205-710-105L	205-710-105R	205-710-0010	205-710-0020	205-715-105L	205-715-105R	205-715-0010	205-715-0020	DN15 ANSI300 FLG	DN10 ANSI300 FLG								
		1/2" BSP	205-410-205L	205-410-205R	205-410-0010	205-410-0020	205-415-205L	205-415-205R	205-415-0010	205-415-0020	DN15 PN16 FLG	DN10 PN16 FLG								
			205-510-205L	205-510-205R	205-510-0010	205-510-0020	205-515-205L	205-515-205R	205-515-0010	205-515-0020	DN15 PN40 FLG	DN10 PN40 FLG								
DN20	3/4"	3/4" NPT	207-610-107L	207-610-107R	207-610-0010	207-610-0020	207-615-107L	207-615-107R	207-615-0010	207-615-0020	DN20 ANSI150 FLG	DN15 ANSI150 FLG	20	247.5	92.5	101	147	110	27	4.8 (10.56)
			207-710-107L	207-710-107R	207-710-0010	207-710-0020	207-715-107L	207-715-107R	207-715-0010	207-715-0020	DN20 ANSI300 FLG	DN15 ANSI300 FLG								
		3/4" BSP	207-410-207L	207-410-207R	207-410-0010	207-410-0020	207-415-207L	207-415-207R	207-415-0010	207-415-0020	DN20 PN16 FLG	DN15 PN16 FLG								
			207-510-207L	207-510-207R	207-510-0010	207-510-0020	207-515-207L	207-515-207R	207-515-0010	207-515-0020	DN20 PN40 FLG	DN15 PN40 FLG								
DN25	1"	1" NPT	210-610-110L	210-610-110R	210-610-0010	210-610-0020	210-615-110L	210-615-110R	210-615-0010	210-615-0020	DN25 ANSI150 FLG	DN15 ANSI150 FLG	25	265	102	106	164	115	33	5.8 (12.76)
			210-710-110L	210-710-110R	210-710-0010	210-710-0020	210-715-110L	210-715-110R	210-715-0010	210-715-0020	DN25 ANSI300 FLG	DN15 ANSI300 FLG								
		1" BSP	210-410-210L	210-410-210R	210-410-0010	210-410-0020	210-415-210L	210-415-210R	210-415-0010	210-415-0020	DN25 PN16 FLG	DN15 PN16 FLG								
			210-510-210L	210-510-210R	210-510-0010	210-510-0020	210-515-210L	210-515-210R	210-515-0010	210-515-0020	DN25 PN40 FLG	DN15 PN40 FLG								
DN32	1 1/4"	1 1/4" NPT	212-610-112L	212-610-112R	212-610-0010	212-610-0020	212-615-112L	212-615-112R	212-615-0010	212-615-0020	DN32 ANSI150 FLG	DN20 ANSI150 FLG	32	314.5	117	123	191.5	125	42	16 (35.2)
			212-710-112L	212-710-112R	212-710-0010	212-710-0020	212-715-112L	212-715-112R	212-715-0010	212-715-0020	DN32 ANSI300 FLG	DN20 ANSI300 FLG								
		1 1/4" BSP	212-410-212L	212-410-212R	212-410-0010	212-410-0020	212-415-212L	212-415-212R	212-415-0010	212-415-0020	DN32 PN16 FLG	DN20 PN16 FLG								
			212-510-212L	212-510-212R	212-510-0010	212-510-0020	212-515-212L	212-515-212R	212-515-0010	212-515-0020	DN32 PN40 FLG	DN20 PN40 FLG								
DN40	1 1/2"	1 1/2" NPT	215-610-115L	215-610-115R	215-610-0010	215-610-0020	215-615-115L	215-615-115R	215-615-0010	215-615-0020	DN40 ANSI150 FLG	DN25 ANSI150 FLG	40	351.5	139	133	224.5	140	48	21 (46.2)
			215-710-115L	215-710-115R	215-710-0010	215-710-0020	215-715-115L	215-715-115R	215-715-0010	215-715-0020	DN40 ANSI300 FLG	DN25 ANSI300 FLG								
		1 1/2" BSP	215-410-215L	215-410-215R	215-410-0010	215-410-0020	215-415-215L	215-415-215R	215-415-0010	215-415-0020	DN40 PN16 FLG	DN25 PN16 FLG								
			215-510-215L	215-510-215R	215-510-0010	215-510-0020	215-515-215L	215-515-215R	215-515-0010	215-515-0020	DN40 PN40 FLG	DN25 PN40 FLG								
DN50	2"	2" NPT	220-610-120L	220-610-120R	220-610-0010	220-610-0020	220-615-120L	220-615-120R	220-615-0010	220-615-0020	DN50 ANSI150 FLG	DN32 ANSI150 FLG	50	402.5	152.5	153	257	160	62	17.5 (38.5)
			220-710-120L	220-710-120R	220-710-0010	220-710-0020	220-715-120L	220-715-120R	220-715-0010	220-715-0020	DN50 ANSI300 FLG	DN32 ANSI300 FLG								
		2" BSP	220-410-220L	220-410-220R	220-410-0010	220-410-0020	220-415-220L	220-415-220R	220-415-0010	220-415-0020	DN50 PN16 FLG	DN32 PN16 FLG								
			220-510-220L	220-510-220R	220-510-0010	220-510-0020	220-515-220L	220-515-220R	220-515-0010	220-515-0020	DN50 PN40 FLG	DN32 PN40 FLG								

200 SERIES SPARE PARTS

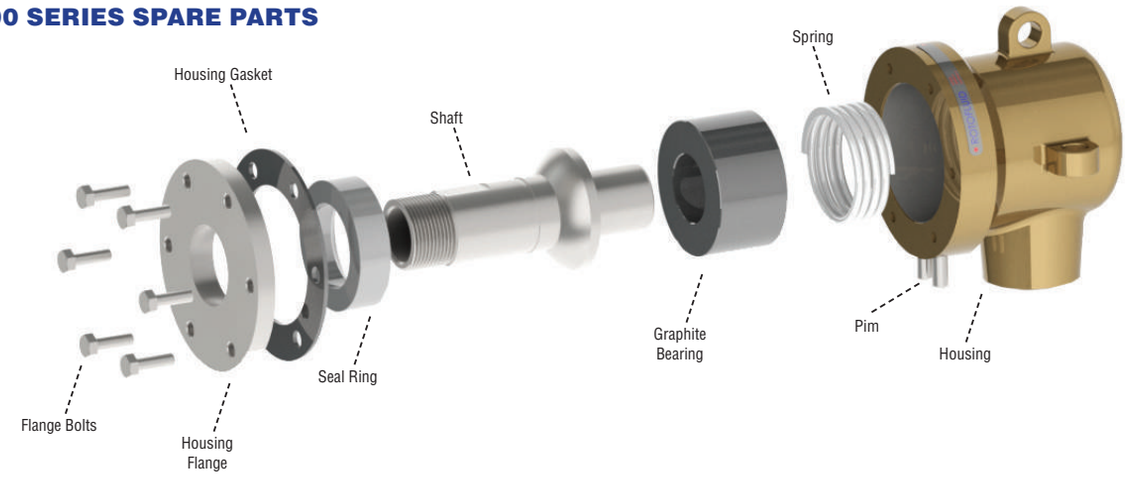

PART NAME	1/2”	3/4”	1”	1 1/4”	1 1/2”	2”
HOUSING (NPT)	RY0420201105R00	RY0420201107R00	RY0420201110R00	RY0420201112R00	RY0420201115R00	RY0420201120R00
HOUSING (BSPP)	RY0420201305R00	RY0420201307R00	RY0420201310R00	RY0420201312R00	RY0420201315R00	RY0420201320R00
HOUSING FLANGE	RY0410202050000	RY0410202075000	RY0410202100000	RY0410202125000	RY0410202150000	RY0410202200000
HOUSING GASKET	HD0010102004000	HD0010102005000	HD0010102006000	HD0010102007000	HD0010102008000	HD0010102009000
SEAL RING	HD0020102004000	HD0020102005000	HD0020102006000	HD0020102007000	HD0020102008000	HD0020102009000
HO SEAL RING	HD0020103004000	HD0020103005000	HD0020103006000	HD0020103007000	HD0020103008000	HD0020103009000
GRAPHITE BEARING	HD0030102004000	HD0030102005000	HD0020102006000	HD0030102007000	HD0030102008000	HD0030102009000
SHAFT - NPT RH	RY0430201105R00	RY0430201107R00	RY0430201110R00	RY0430201112R00	RY0430201115R00	RY0430201120R00
SHAFT - NPT LH	RY0430201105L00	RY0430201107L00	RY0430201110L00	RY0430201112L00	RY0430201115L00	RY0430201120L00
SHAFT - BSP RH	RY0430201305R00	RY0430201307R00	RY0430201310R00	RY0430201312R00	RY0430201315R00	RY0430201320R00
SHAFT - BSP LH	RY0430201305L00	RY0430201307L00	RY0430201310L00	RY0430201312L00	RY0430201315L00	RY0430201320L00
SHAFT - QR	RY0430201040000	RY0430201050000	RY0430201060000	RY0430201070000	RY0430201080000	RY0430201090000
SHAFT - QR/1	RY0430201040100	RY0430201050100	RY0430201060100	RY0430201070100	RY0430201080100	RY0430201090100
SPRING	HD0150001023000	HD0150001024000	HD0150001025000	HD0150001026000	HD0150001027000	HD0150001028000
BOLTS	HD0240101004000	HD0240101005000	HD0240101008000	HD0240101009000	HD0240101014000	HD0240101014000
PIM	RY0440101001000	RY0440101002000	RY0440101002000	RY0440101002000	RY0440101003000	RY0440101003000

900S SERIES

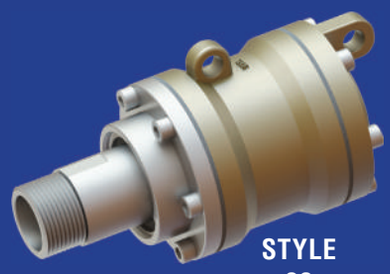
STYLE 20

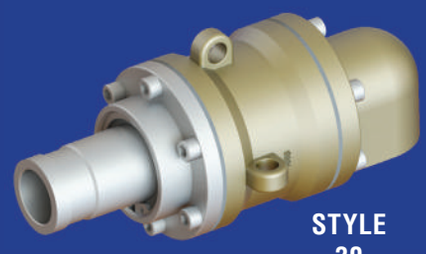
STYLE 30

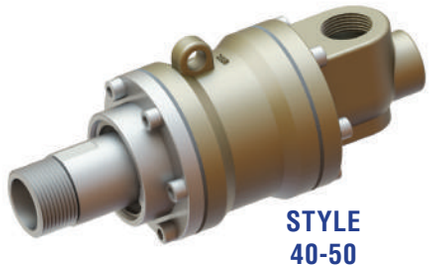
STYLE 40-50

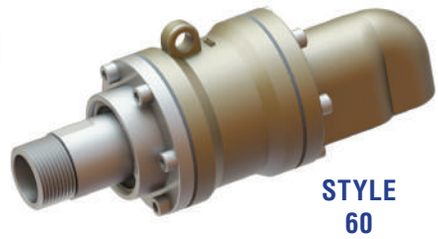
STYLE 60

For STEAM, HOT OIL, WATER
1/2" (DN15) – 5" (DN125)

- Self supported rotating joint
- Single and dual flow
- Cast iron housing
- Nickel plated steel shaft
- Torque lugs on housing
- Seal wear indicator on shaft

Application Parameters

Max. Steam Pressure	: 17 bar	250psi
Max. Steam Temperature	: 200°C	400°F
Max. Hot Oil Pressure	: 10 bar	150psi
Max. Hot Oil Temperature	: 315°C	600°F
Max. Speed	: 600 RPM	600 min^{-1}

*Only for 900S-HO Models

Avoid working with max. speed at max. pressure

For further information, please consult FACTORY, or your local representative.

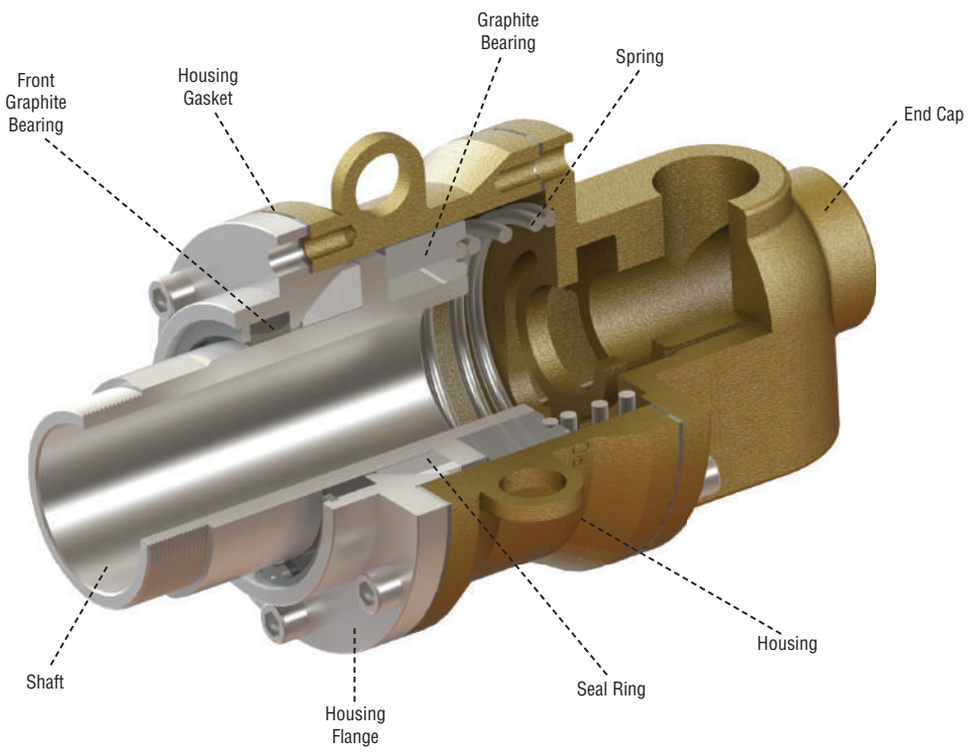

900S SERIES - STYLE 20

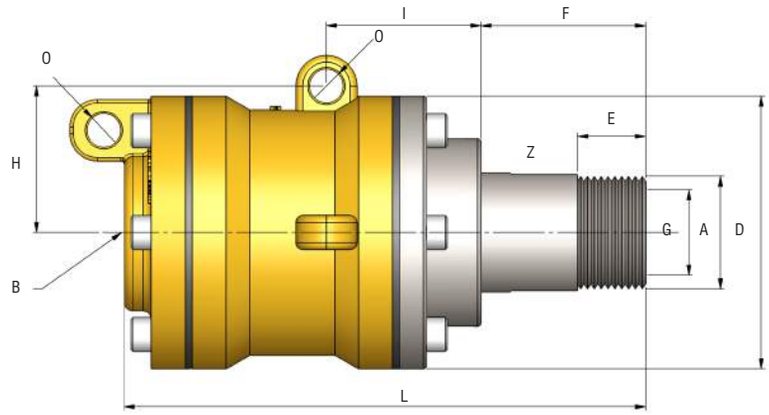

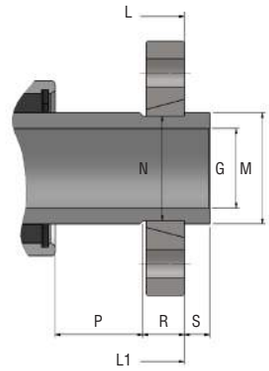

Z: 2x Wrench Flats

A			MODEL	B	D	E	F	G	H	I	L	M	N	O	P	R	S	Z	WEIGHT kg (lb)
SIZE		THREAD TYPE																	
DN15	1/2”	THREADED	905	1/2”	68	18	40	15	36	44.5	134	-	-	10	-	-	-	21	1.6 (3.28)
		QR									127	24	22		23	11	6	-	
		QR/1									123	20.7	20		14.5	16	9.5		
DN20	3/4”	THREADED	907	3/4”	74	20	46.5	20	40	44.5	141.5	-	-	10	-	-	-	28	2 (4.1)
		QR									133.5	30	28		25.5	13	8	-	
		QR/1									128	26	24.5		18.4	17	11.1		
DN25	1”	THREADED	910	1”	80	20	48.5	25	43	46.5	151.5	-	-	10	-	-	-	34	2.5 (5.12)
		QR									143.5	35	33		27.5	13	8	-	
		QR/1									140.4	32.5	31		20.4	17	11.1		
DN32	1 1/4”	THREADED	912	1 1/4”	103	23	50	32	56	52	167	-	-	14	-	-	-	43	4 (8.2)
		QR									159	45	43		29	13	8	-	
		QR/1									154.5	41.3	39.5		18.3	19	12.7		
DN40	1 1/2”	THREADED	915	1 1/2”	112	23	55	40	62	53	180	-	-	18	-	-	-	52	4.6 (9.43)
		QR									170	50	48		29	16	10	-	
		QR/1									167	47.6	45		20.3	22	12.7		
DN50	2”	THREADED	920	2”	124	25	56	50	68	55.5	200	-	-	18	-	-	-	62	6.2 (12.81)
		QR									190.2	65	63		30.2	16	9.8	-	
		QR/1									183	59	57		18.1	22	15.9		
DN65	2 1/2”	THREADED	925	2 1/2”	159	25	67.5	62	84.5	68	229.5	-	-	22	-	-	-	80	15 (30.75)
		QR									219.5	85	82		41.5	16	10	-	
		QR/1									225.5	72.2	69		20	28.5	19		
DN80	3”	THREADED	930	3”	186	30	77.5	73	99	77	263	-	-	28	-	-	-	91	20 (41)
		QR									-	-	-		-	-	-	-	
		QR/1									241	87.3	84		23.3	32	22.2		
DN100	4”	THREADED	940	4”	226	35	129	98	118	86	353	-	-	28	-	-	-	118	37.5 (76.87)
		QR									341	114	110		95	22	12	-	
		QR/1									328	112.70	109.5		65.6	38	25.40		
DN125	5”	THREADED	950	5”	265	35	130	122	137	93	376	-	-	28	-	-	-	146	48 (98.4)
		QR									341	150	145		56	39	35	-	
		QR/1									344	139.2	136		56	42	32		

900S SERIES - STYLE 30

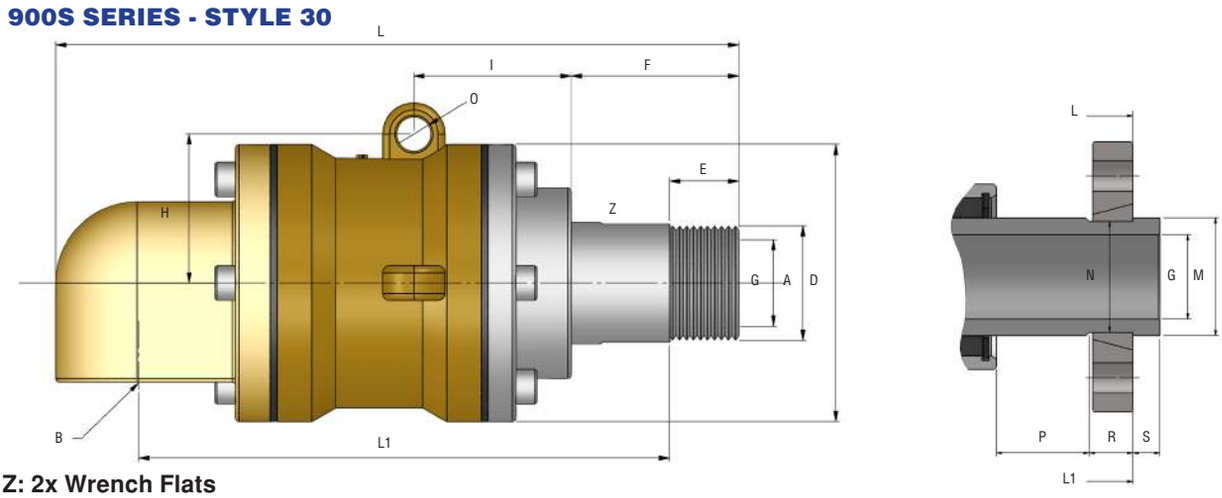

Z: 2x Wrench Flats

A			MODEL	B	D	E	F	G	H	I	L	L1	M	N	O	P	R	S	Z	WEIGHT kg (lb)
SIZE		THREAD TYPE																		
DN15	1/2”	THREADED	905	1/2”	68	18	40	15	36	44.5	165.5	131	-	-	10	-	-	-	21	1.7 (3.48)
		QR									160	143	24	22		23	11	6	-	
		QR/1									157	139	20.7	20		14.5	16	9.5		
DN20	3/4”	THREADED	907	3/4”	74	20	46.5	20	40	44.5	179.5	140.5	-	-	10	-	-	-	28	2.1 (4.3)
		QR									171.5	152.5	30	28		25.5	13	8	-	
		QR/1									168.5	149.4	26	24.5		18.4	17	11.1		
DN25	1”	THREADED	910	1”	80	20	48.5	25	43	46.5	195.5	153.5	-	-	10	-	-	-	34	2.7 (5.53)
		QR									187.5	165.5	35	33		27.5	13	8	-	
		QR/1									184.5	162.4	32.5	31		20.4	17	11.1		
DN32	1 1/4”	THREADED	912	1 1/4”	103	23	50	32	56	52	219	167	-	-	14	-	-	-	43	4.45 (9.12)
		QR									211	182	45	43		29	13	8	-	
		QR/1									206	177	41.3	39.5		18.3	19	12.7		
DN40	1 1/2”	THREADED	915	1 1/2”	112	23	55	40	62	53	236	181	-	-	18	-	-	-	52	5.25 (10.76)
		QR									226	194	50	48		29	16	10	-	
		QR/1									223	191	47.6	45		20.3	22	12.7		
DN50	2”	THREADED	920	2”	124	25	56	50	68	55.5	269.5	204	-	-	18	-	-	-	62	7.25 (14.86)
		QR									259.5	219.2	65	63		30.2	16	9.8	-	
		QR/1									254	213.1	59	57		18.1	22	15.9		
DN65	2 1/2”	THREADED	925	2 1/2”	159	25	67.5	62	84.5	68	326.5	253	-	-	22	-	-	-	80	17.75 (36.38)
		QR									316.5	267.5	85	82		41.5	16	10	-	
		QR/1									322.5	273.5	72.2	69		35	28.5	19		
DN80	3”	THREADED	930	3”	186	30	77.5	73	99	77	373	285	-	-	28	-	-	-	91	20 (41)
		QR									-	-	-	-		-	-	-	-	
		QR/1									351	293	87.3	84		23.3	32	22.2		
DN100	4”	THREADED	940	4”	226	35	129	98	118	86	492	384	-	-	28	-	-	-	118	47 (96.35)
		QR									480	407	114	110		95	22	12	-	
		QR/1									467	394	112.70	109.5		65.6	38	25.40		
DN125	5”	THREADED	950	5”	265	35	130	122	137	93	545	430	-	-	28	-	-	-	146	61 (125)
		QR									510	425	150	145		56	39	35	-	
		QR/1									513	428	139.2	136		56	42	32		

900S SERIES - STYLE 40

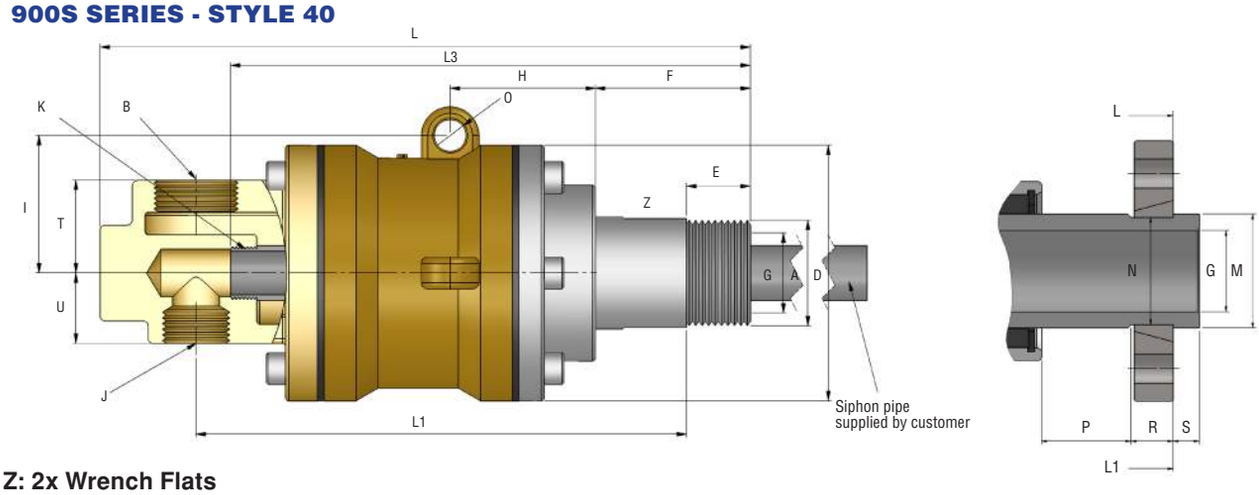

Z: 2x Wrench Flats

A			MODEL	B	K	J	D	E	F	G	H	I	L	L1	L3	M	N	O	P	R	S	T	U	Z	WEIGHT kg (lb)
SIZE		THREAD TYPE																							
DN15	1/2”	THREADED	905	1/2”	1/8”	1/8”	68	18	40	15	36	44.5	172	132	140	-	-	10	-	-	-	22	15	21	1.7 (3.48)
		QR											167	144	134	24	22		23	11	6			-	
		QR/1											163.5	140	130.5	20.7	20		14.5	16	9.5				
DN20	3/4”	THREADED	907	1/2”	1/8” 1/4”	1/2”	74	20	46.5	20	40	44.5	185.5	140.5	152.5	-	-	10	-	-	-	26	19	28	2.1 (4.3)
		QR											177.5	152.5	144.5	30	28		25.5	13	8			-	
		QR/1											174.5	149.4	141.4	26	24.5		18.4	17	11.1				
DN25	1”	THREADED	910	3/4”	1/4” 3/8”	1/2”	80	20	48.5	25	43	46.5	201.5	151.5	162.5	-	-	10	-	-	-	29	22	34	2.7 (5.53)
		QR											193.5	163.5	154.5	35	33		27.5	13	8			-	
		QR/1											191.4	160.4	151.4	32.5	31		20.4	17	11.1				
DN32	1 1/4”	THREADED	912	1”	3/8” 1/2”	1/2”	103	23	50	32	56	52	222	164	181	-	-	14	-	-	-	36	27	43	4.45 (9.12)
		QR											214	179	173	45	43		29	13	8			-	
		QR/1											209	174	168	41.3	39.5		18.3	19	12.7				
DN40	1 1/2”	THREADED	915	1 1/4”	1/2” 3/4”	3/4”	112	23	55	40	62	53	251	186	195	-	-	18	-	-	-	41	33	52	5.25 (10.76)
		QR											241	199	185	50	48		29	16	10			-	
		QR/1											238	196	182	47.6	45		20.3	22	12.7				
DN50	2”	THREADED	920	1 1/2”	1/2” 3/4” 1”	3/4” 1”	124	25	56	50	68	55.5	280	210	217	-	-	18	-	-	-	47	35	62	7.25 (14.86)
		QR											270	225.2	207	65	63		30.2	16	.9.8			-	
		QR/1											265	219.1	202	59	57		18.1	22	15.9				
DN65	2 1/2”	THREADED	925	2”	3/4” 1”	1”	159	25	67.5	62	84.5	68	321	246	251	-	-	22	-	-	-	59	45	80	17.75 (36.38)
		QR											311	260.5	241	85	82		41.5	16	10			-	
		QR/1											317	266.5	247	72.2	69		35	28.5	19				
DN80	3”	THREADED	930	2” 2 1/2” 3”	3/4” 1” 1 1/4” 1 1/2”	1 1/4” 1 1/2”	186	30	77.5	73	99	77	374.5	284.5	286	-	-	28	-	-	-	68	50	91	20 (41)
		QR											-	-	-	-	-		-	-	-			-	
		QR/1											352.5	292.5	264	87.3	84		23.3	32	22.2				
DN100	4”	THREADED	940	3”	1 1/2” 2”	1 1/2” 2”	226	35	129	98	118	86	499	384	389	-	-	28	-	-	-	90	65	118	47 (96.35)
		QR											477	407	377	114	110		95	22	12			-	
		QR/1											464	394	364	112.70	109.5		65.6	38	25.40				
DN125	5”	THREADED	950	4”	2 1/2”	3”	265	35	130	122	137	93	562	427	502	-	-	28	-	-	-	105	75	146	61 (125)
		QR											527	422	467	150	145		56	39	35			-	
		QR/1											530	425	470	139.2	136		56	42	32				

900S SERIES - STYLE 50

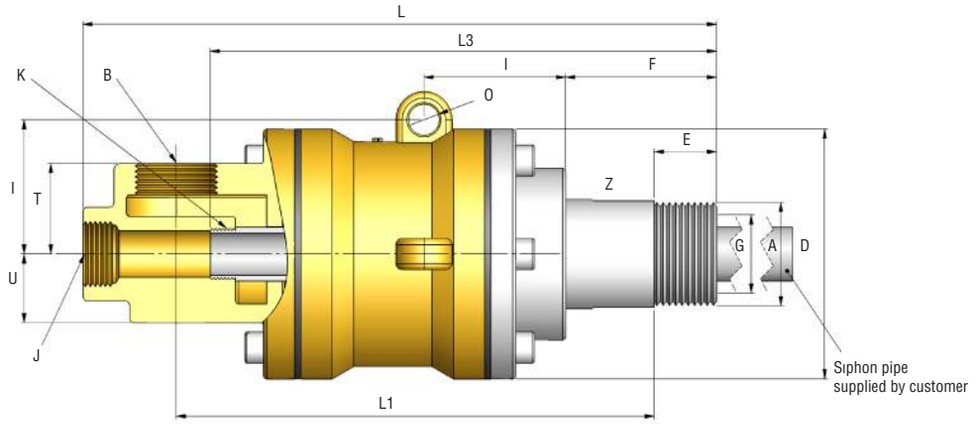

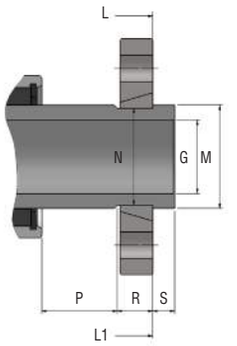

Z: 2x Wrench Flats

A SIZE		A THREAD TYPE	MODEL	B	K	J	D	E	F	G	H	I	L	L1	L3	M	N	O	P	R	S	T	U	Z	WEIGHT kg (lb)
DN15	1/2”	THREADED	905	1/2”	1/8”	1/8”	68	18	40	15	36	44.5	172	132	140	-	-	10	-	-	-	22	15	21	1.7 (3.48)
		QR											167	144	134	24	22		23	11	6			-	
		QR/1											163.5	140	130.5	20.7	20		14.5	16	9.5				
DN20	3/4”	THREADED	907	1/2”	1/8” 1/4”	1/2”	74	20	46.5	20	40	44.5	185.5	140.5	152.5	-	-	10	-	-	-	26	19	28	2.1 (4.3)
		QR											177.5	152.5	144.5	30	28		25.5	13	8			-	
		QR/1											174.5	149.4	141.4	26	24.5		18.4	17	11.1				
DN25	1”	THREADED	910	3/4”	1/4” 3/8”	1/2”	80	20	48.5	25	43	46.5	201.5	151.5	162.5	-	-	10	-	-	-	29	22	34	2.7 (5.53)
		QR											193.5	163.5	154.5	35	33		27.5	13	8			-	
		QR/1											191.4	160.4	151.4	32.5	31		20.4	17	11.1				
DN32	1 1/4”	THREADED	912	1”	3/8” 1/2”	1/2”	103	23	50	32	56	52	222	164	181	-	-	14	-	-	-	36	27	43	4.45 (9.12)
		QR											214	179	173	45	43		29	13	8			-	
		QR/1											209	174	168	.41.3	39.5		18.3	19	12.7				
DN40	1 1/2”	THREADED	915	1 1/4”	1/2” 3/4”	3/4”	112	23	55	40	62	53	251	186	195	-	-	18	-	-	-	41	33	52	5.25 (10.76)
		QR											241	199	185	50	48		29	16	10			-	
		QR/1											238	196	182	47.6	45		20.3	22	12.7				
DN50	2”	THREADED	920	1 1/2”	1/2” 3/4” 1”	3/4” 1”	124	25	56	50	68	55.5	280	210	217	-	-	18	-	-	-	47	35	62	7.25 (14.86)
		QR											270	225.2	207	65	63		30.2	16	9.8			-	
		QR/1											265	219.1	202	59	57		18.1	22	15.9				
DN65	2 1/2”	THREADED	925	2”	3/4” 1”	1”	159	25	67.5	62	84.5	68	321	246	251	-	-	22	-	-	-	59	45	80	17.75 (36.38)
		QR											311	260.5	241	85	82		41.5	16	10			-	
		QR/1											317	266.5	247	72.2	69		35	28.5	19				
DN80	3”	THREADED	930	2” 2 1/2” 3”	3/4” 1” 1 1/4” 1 1/2”	1 1/4” 1 1/2”	186	30	77.5	73	99	77	374.5	284.5	286	-	-	28	-	-	-	68	50	91	20 (41)
		QR											-	-	-	-	-		-	-	-			-	
		QR/1											352.5	292.5	264	87.3	84		23.3	32	22.2				
DN100	4”	THREADED	940	3”	1 1/2” 2”	1 1/2” 2”	226	35	129	98	118	86	499	384	389	-	-	28	-	-	-	90	65	118	47 (96.35)
		QR											477	407	377	114	110		95	22	12			-	
		QR/1											464	394	364	112.70	109.5		65.6	38	25.40				
DN125	5”	THREADED	950	4”	2 1/2”	3”	265	35	130	122	137	93	562	427	502	-	-	28	-	-	-	105	75	146	61 (125)
		QR											527	422	467	150	145		56	39	35			-	
		QR/1											530	425	470	139.2	136		56	42	32				

900S SERIES - STYLE 60

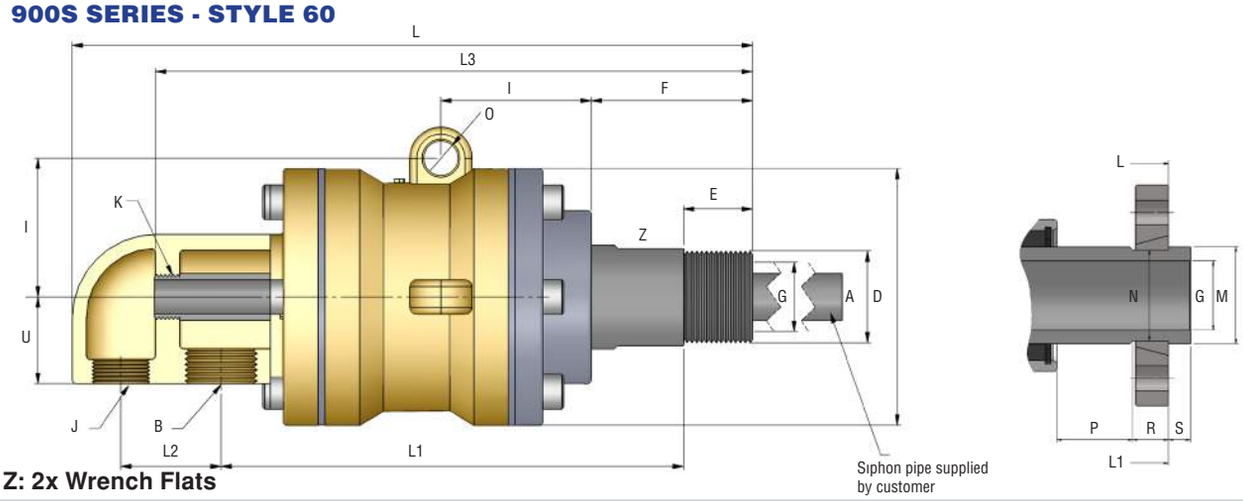

Z: 2x Wrench Flats

A SIZE		A THREAD TYPE	MODEL	B	K	J	D	E	F	G	H	I	L	L1	L2	L3	M	N	O	P	R	S	U	Z	WEIGHT kg (lb)
DN15	1/2"	THREADED	905	1/2"	1/8"	1/8"	68	18	40	15	36	44.5	185	131	24	167.5	-	-	10	-	-	-	22	21	1.9 (3.89)
		QR											180	143		161.5	24	22		23	11	6		-	
		QR/1											176.5	139		158	20.7	20		14.5	16	9.5			
DN20	3/4"	THREADED	907	1/2"	1/8" 1/4"	3/8"	74	20	46.5	20	40	44.5	194.5	133.5	27	172.5	-	-	10	-	-	-	25	28	2.15 (4.4)
		QR											186.5	145.5		164.5	30	28		25.5	13	8		-	
		QR/1											183.4	142.4		161.4	26	24.5		18.4	17	11.1			
DN25	1"	THREADED	910	3/4"	1/4" 3/8"	1/2"	80	20	48.5	25	43	46.5	220.5	164	37.5	192.5	-	-	10	-	-	-	28	34	2.7 (5.35)
		QR											246	179		184.5	35	33		27.5	13	8		-	
		QR/1											241	174		181.4	32.5	31		20.4	17	11.1			
DN32	1 1/4"	THREADED	912	1"	3/8" 1/2"	1/2"	103	23	50	32	56	52	254	164	46.5	222.5	-	-	14	-	-	-	35	43	4.4 (9.02)
		QR											246	179		214.5	45	43		29	13	8		-	
		QR/1											241	174		209.8	41.3	39.5		18.3	19	12.7			
DN40	1 1/2"	THREADED	915	1 1/4"	1/2" 3/4"	3/4"	112	23	55	40	62	53	280	181	54	244.5	-	-	18	-	-	-	41	52	6.75 (13.83)
		QR											270	194		234.5	50	48		29	16	10		-	
		QR/1											267	191		231.8	47.6	45		20.3	22	12.7			
DN50	2"	THREADED	920	1 1/2"	1/2" 3/4" 1"	3/4" 1"	124	25	56	50	68	55.5	316	200	64	268.5	-	-	18	-	-	-	43	62	8 (16.4)
		QR											306.2	215.2		258.7	65	63		30.2	16	9.8		-	
		QR/1											300.5	209.1		252.6	59	57		18.1	22	15.9			
DN65	2 1/2"	THREADED	925	2"	3/4" 1"	1"	159	25	67.5	62	84.5	68	370	244	72	341.5	-	-	22	-	-	-	55	80	19 (38.95)
		QR											360	258.5		331.5	85	82		41.5	16	10		-	
		QR/1											366	264		322.5	72.2	69		20	28.5	19			
DN80	3"	THREADED	930	2" 2 1/2" 3"	3/4" 1" 1 1/4" 1 1/2"	1 1/4" 1 1/2"	186	30	77.5	73	99	77	436	277	89	371	-	-	28	-	-	-	65	91	25.5 (52.27)
		QR											-	-		-	-	-		-	-	-		-	
		QR/1											414	285		348.8	87.3	84		23.3	32	22.2			
DN100	4"	THREADED	940	3"	1 1/2" 2"	1 1/2" 2"	226	35	129	98	118	86	574	378	111	503	-	-	28	-	-	-	85	118	51 (104.5)
		QR											562	401		491	114	110		95	22	12		-	
		QR/1											549	388		477.6	112.70	109.5		65.6	38	25.40			
DN125	5"	THREADED	950	4"	2 1/2"	3"	265	35	130	122	137	93	652	419	137.5	544.5	-	-	28	-	-	-	95	146	65 (133.25)
		QR											617	414		509.5	150	145		56	39	35		-	
		QR/1											620	417		512.5	139.2	136		56	42	32			

900S SERIES - SPARE PARTS LIST

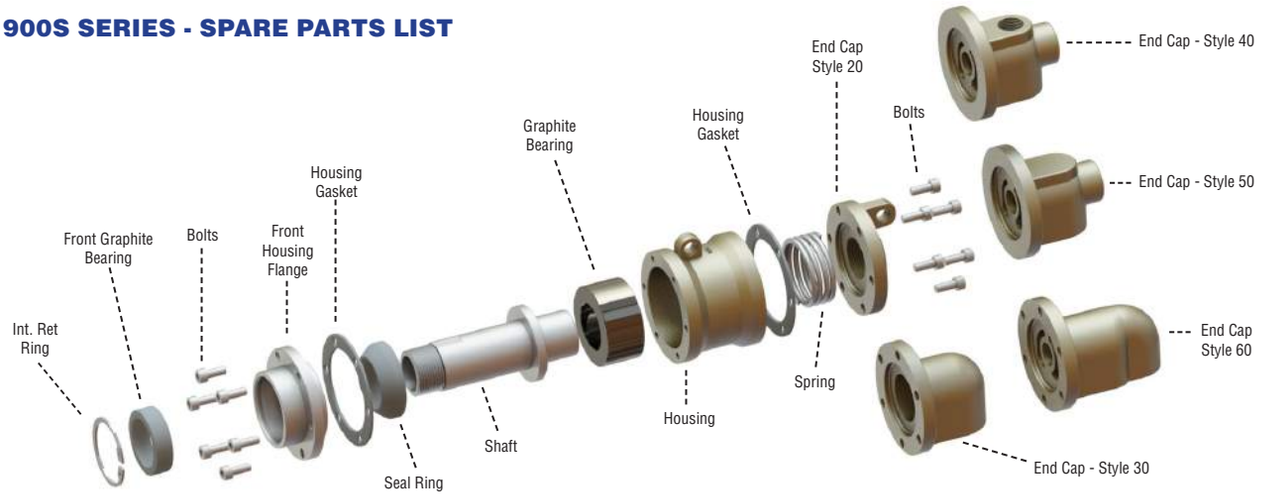

PART NAME / SIZE	1/2"	3/4"	1"	1 1/4"	1 1/2"	2"	2 1/2"	3"	4"	5"
HOUSING	RY0800201050000	RY0800201075000	RY0800201100000	RY0800201125000	RY0800201150000	RY0800201200000	RY0800201250000	RY0800201300000	RY0800201400000	RY0800201500000
END CAP-STYLE 20 (NPT)	RY0812105105R00	RY0812107107R00	RY0812110110R00	RY0812112112R00	RY0812115115R00	RY0812120120R00	RY0812125125R00	RY0812130130R00	RY0812140140R00	RY0812150150R00
END CAP-STYLE 20 (BSPP)	RY0812105305R00	RY0812107307R00	RY0812110310R00	RY0812112312R00	RY0812115315R00	RY0812120320R00	RY0812125325R00	RY0812130330R00	RY0812140340R00	RY0812150350R00
END CAP-STYLE 30 (NPT)	RY0822105105R00	RY0822107107R00	RY0822110110R00	RY0822112112R00	RY0822115115R00	RY0822120120R00	RY0822125125R00	RY0822130130R00	RY0822140140R00	RY0822150150R00
END CAP-STYLE 30 (BSPP)	RY0822105305R00	RY0822107307R00	RY0822110310R00	RY0822112312R00	RY0822115315R00	RY0822120320R00	RY0822125325R00	RY0822130330R00	RY0822140340R00	RY0822150350R00
END CAP-STYLE 40	RY083205XXXXXXX	RY083207XXXXXXX	RY083210XXXXXXX	RY083212XXXXXXX	RY083215XXXXXXX	RY083220XXXXXXX	RY083225XXXXXXX	RY083230XXXXXXX	RY083240XXXXXXX	RY083250XXXXXXX
END CAP-STYLE 50	RY084205XXXXXXX	RY084207XXXXXXX	RY084210XXXXXXX	RY084212XXXXXXX	RY084215XXXXXXX	RY084220XXXXXXX	RY084225XXXXXXX	RY084230XXXXXXX	RY084240XXXXXXX	RY084250XXXXXXX
END CAP-STYLE 60	RY085205XXXXXXX	RY085207XXXXXXX	RY085210XXXXXXX	RY085212XXXXXXX	RY085215XXXXXXX	RY085220XXXXXXX	RY085225XXXXXXX	RY085230XXXXXXX	RY085240XXXXXXX	RY085250XXXXXXX
SHAFT - NPT - RH	RY08712105R0000	RY08712107R0000	RY08712110R0000	RY08712112R0000	RY08712115R0000	RY08712120R0000	RY08712125R0000	RY08712130R0000	RY08712140R0000	RY08712150R0000
SHAFT - NPT - LH	RY08712105L0000	RY08712107L0000	RY08712110L0000	RY08712112L0000	RY08712115L0000	RY08712120L0000	RY08712125L0000	RY08712130L0000	RY08712140L0000	RY08712150L0000
SHAFT - BSP - RH	RY08712205R0000	RY08712207R0000	RY08712210R0000	RY08712212R0000	RY08712215R0000	RY08712220R0000	RY08712225R0000	RY08712230R0000	RY08712240R0000	RY08712250R0000
SHAFT - BSP - LH	RY08712205L0000	RY08712207L0000	RY08712210L0000	RY08712212L0000	RY08712215L0000	RY08712220L0000	RY08712225L0000	RY08712230L0000	RY08712240L0000	RY08712250L0000
SHAFT - QR	RY0871205000000	RY0871207000000	RY0871210000000	RY0871212000000	RY0871215000000	RY0871220000000	RY0871225000000	RY0871230000000	RY0871240000000	RY0871250000000
SHAFT - QR/NO1	RY0871205010000	RY0871207010000	RY0871210010000	RY0871212001000	RY0871215001000	RY0871220001000	RY0871225001000	RY0871230001000	RY0871240001000	RY0871250001000
FRONT GRAPHITE BEARING	HD0030202004000	HD0030202005000	HD0030202006000	HD0030202007000	HD0030202008000	HD0030202009000	HD0030202010000	HD0030202011000	HD0030202013000	HD0030202014000
INT. RET. RING	HD0180201007000	HD0180201009000	HD0180201011000	HD0180201016000	HD0180201020000	HD0180201023000	HD0180201028000	HD0180201030000	HD0180201033000	HD0180201034000
BOLTS	HD0240201008000	HD0240201008000	HD0240201008000	HD0240201012000	HD0240201012000	HD0240201013000	HD0240201017000	HD0240201021000	HD0240201021000	HD0240201027000
HOUSING GASKET	HD0010202004000	HD0010202005000	HD00102020106000	HD0010202007000	HD0010202008000	HD0010202009000	HD0010202010000	HD0010202011000	HD0010202013000	HD0010202014000
FRONT HOUSING FLANGE	RY0860102050000	RY0860102075000	RY0860102100000	RY0860102125000	RY0860102150000	RY0860102200000	RY0860102250000	RY0860102300000	RY0860102350000	RY0860102400000
SEAL RING	HD0020202004000	HD0020202005000	HD0020202006000	HD0020202007000	HD0020202008000	HD0020202009000	HD0020202010000	HD0020202011000	HD0020202012000	HD0020202013000
HO SEAL RING	HD0020203004000	HD0020203005000	HD0020203006000	HD0020203007000	HD0020203008000	HD0020203009000	HD0020203010000	HD0020203011000	HD0020203012000	HD0020203013000
REAR GRAPHITE BEARING	HD0030302004000	HD0030302005000	HD0030302006000	HD0030302007000	HD0030302008000	HD0030302009000	HD0030302010000	HD0030302011000	HD0030302013000	HD0030302014000
SPRING	HD0150001050000	HD0150001051000	HD0150001052000	HD0150001053000	HD0150001054000	HD0150001055000	HD0150001056000	HD0150001057000	HD0150001058000	HD0150001059000

900R SERIES

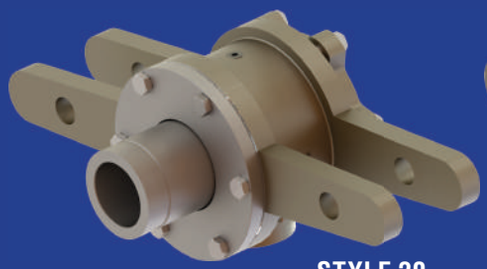

STYLE 20

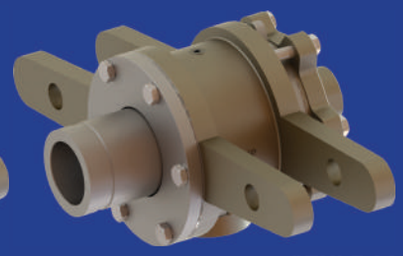

STYLE 30

For STEAM, HOT OIL, WATER
1/2" (DN15) – 5" (DN125)

- Rod supported rotating joint
- Single and dual flow
- Cast iron housing
- Nickel plated steel shaft
- Seal wear indicator on shaft

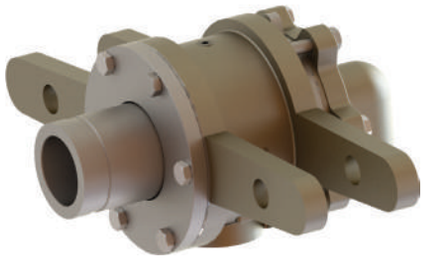

STYLE 40

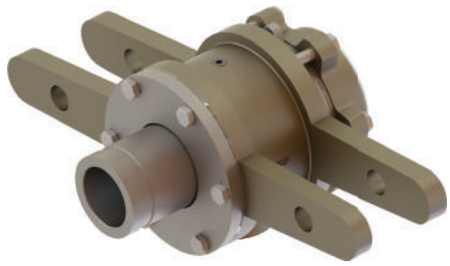

STYLE 50

Application Parameters

Max. Steam Pressure	: 17 bar	250psi
Max. Steam Tempereture	: 200°C	400°F
Max. Hot Oil Pressure	: 10 bar	150psi
Max. Hot Oil Tempereture	: 315°C	600°F
Max. Speed	: 200 RPM	200 min^{-1}

*Only for 900R-HO Models

Avoid working with max. speed at max. pressure

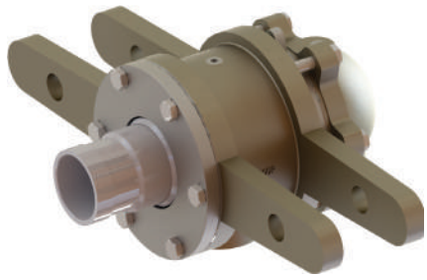

STYLE 60

For further information, please consult FACTORY, or your local representative.

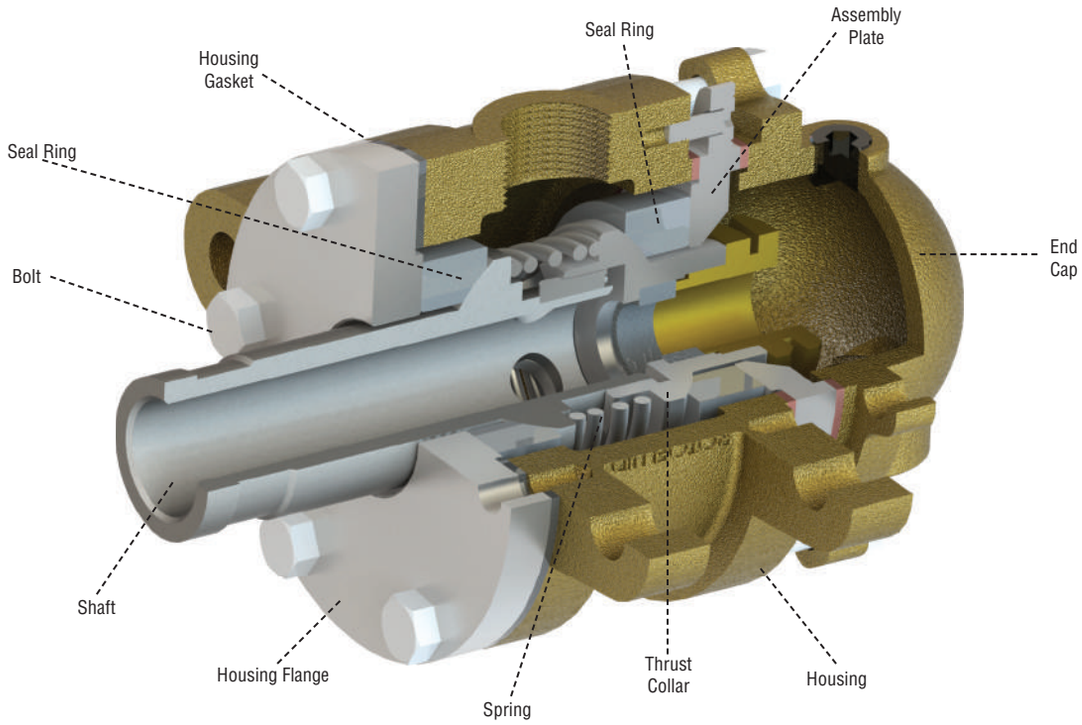

900R SERIES - STYLE 20

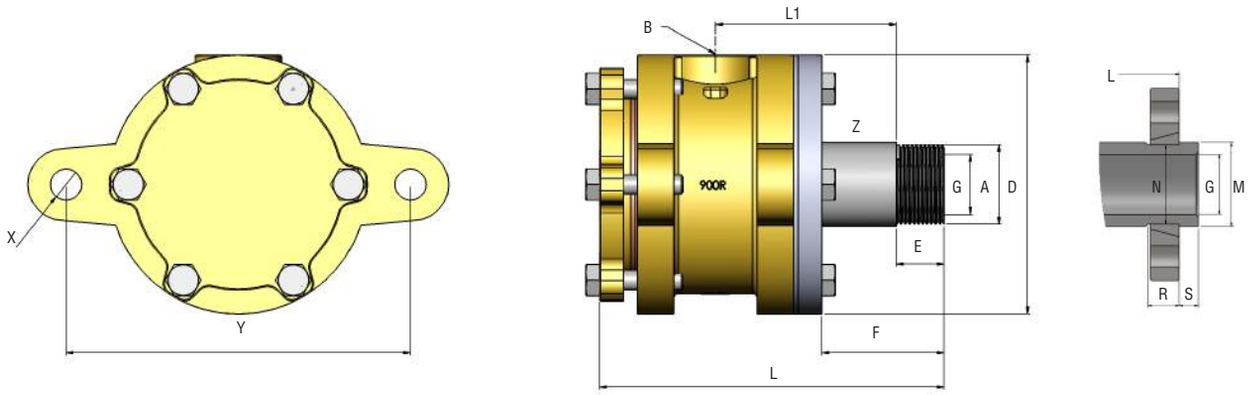

Z: 2xWrench Flats

A			MODEL	B	D	E	F	G	L	L1	M	N	P	R	S	X	Y (min-max)	Z	WEIGHT kg (lb)
SIZE		THREAD TYPE																	
DN15	1/2"	THREADED	905	1/4" 1/2"	80	18	38	15	123.5	77.5	-	-	-	-	-	10	95	21	3.15 (6.45)
		QR							117.5	71.5	24	22	23	11	6			-	
		QR/1							114	68	20.7	20	14.5	16	9.5				
DN20	3/4"	THREADED	907	1/2" 3/4"	87	20	42	20	132.5	64	-	-	-	-	-	13	102-108	28	3.7 (7.58)
		QR							124.5	76	30	28	25.5	13	8			-	
		QR/1							122.4	72.9	26	24.5	18.4	17	11.1				
DN25	1"	THREADED	910	3/4"	108	20	51	25	144	95	-	-	-	-	-	13 20	124-246 133-146	34	5.25 (10.76)
		QR							136	87	35	33	27.5	13	8			-	
		QR/1							132.9	83.9	32.5	31	20.4	17	11.1				
DN32	1 1/4"	THREADED	912	1"	116	23	57	32	161.5	105	-	-	-	-	-	13 20	130-222 152-165	43	7.1 (14.55)
		QR							153.5	97	45	43	29	13	8			-	
		QR/1							148.8	92.3	41.3	39.5	18.3	19	12.7				
DN40	1 1/2"	THREADED	915	1 1/4"	152	23	71	40	191	128.5	-	-	-	-	-	21 27	171-257 202-257	52	13 (26.65)
		QR							181	118.5	50	48	29	16	10			-	
		QR/1							178.3	115.8	47.6	45	20.3	22	12.7				
DN50	2"	THREADED	920	1 1/2"	162	25	72	50	216	139	-	-	-	-	-	21 27	197-400 217-254	62	18 (36.9)
		QR							206.2	129.2	65	63	30.2	16	9.8			-	
		QR/1							200.1	123.1	59	57	18.1	22	15.9				
DN65	2 1/2"	THREADED	925	2"	185	25	80	62	237	148	-	-	-	-	-	21 27	210-464 216-235	80	27 (55.35)
		QR							227	138	85	82	41.5	16	10			-	
		QR/1							218	144.5	72.2	69	20	28.5	19				
DN80	3"	THREADED	930	2 1/2"	200	30	95.5	73	291	189	-	-	-	-	-	27 33	235-495 241-489	91	36.5 (74.85)
		QR							-	-	-	-	-	-	-			-	
		QR/1							268.8	166.8	87.3	84	23.3	32	22.2				
DN100	4"	THREADED	940	2" 2 1/2" 3"	257	35	141	98	366	251	-	-	-	-	-	33 41	300-465 308-457	118	61 (125.05)
		QR							354	239	114	110	95	22	12			-	
		QR/1							340.6	225.6	112.70	109.5	65.6	38	25.40				
DN125	5"	THREADED	950	2" 2 1/2" 3" 4"	330	35	150	122	409.5	275	-	-	-	-	-	54	400-457	146	102 (209.1)
		QR							374.5	240	150	145	56	39	35			-	
		QR/1							377.5	243	139.2	136	56	42	32				

900R SERIES - STYLE 30

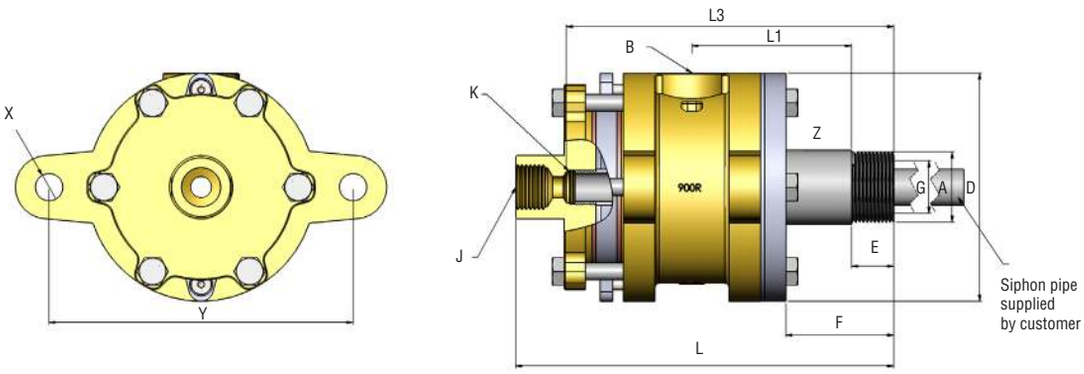

Z: 2xWrench Flats

A			MODEL	B	K	J	D	E	F	G	L	L1	L3	M	N	P	R	S	X	Y (min-max)	Z	WEIGHT kg (lb)
SIZE		THREAD TYPE																				
DN15	1/2"	THREADED	905	1/4" 1/2"	1/8"	1/4"	80	18	38	15	152.5	77.5	129.5	-	-	-	-	-	10	95	21	2.25 (4.61)
		QR									146.5	71.5	123.5	24	22	23	11	6			-	
		QR/1									143	68	120	20.7	20	14.5	16	9.5				
DN20	3/4"	THREADED	907	1/2" 3/4"	1/8" 1/4"	1/2"	87	20	42	20	161.5	64	138.5	-	-	-	-	-	13	102-108	28	3.75 (7.68)
		QR									153.5	76	130.5	30	28	25.5	13	8			-	
		QR/1									150.4	72.9	127.4	26	24.5	18.4	17	11.1				
DN25	1"	THREADED	910	3/4"	1/4" 3/8"	1/2"	108	20	51	25	180	95	154	-	-	-	-	-	13 20	124-246 133-146	34	5.45 (11.17)
		QR									172	87	146	35	33	27.5	13	8			-	
		QR/1									168.9	83.9	142.9	32.5	31	20.4	17	11.1				
DN32	1 1/4"	THREADED	912	1"	3/8" 1/2" 3/4"	1/2" 3/4"	116	23	57	32	204	105	174	-	-	-	-	-	13 2	130-222 152-165	43	7.15 (14.65)
		QR									196	97	166	45	43	29	13	8			-	
		QR/1									191.3	92.3	161.3	41.3	39.5	18.3	19	12.7				
DN40	1 1/2"	THREADED	915	1 1/4"	1/2" 3/4"	3/4"	152	23	71	40	238	128.5	206	-	-	-	-	-	21 27	171-257 202-257	52	13 (26.65)
		QR									228	118.5	196	50	48	29	16	10			-	
		QR/1									225.3	115.8	193.3	47.6	45	20.3	22	12.7				
DN50	2"	THREADED	920	1 1/2"	3/4" 1" 1 1/4"	1 1/4"	162	25	72	50	267	139	228	-	-	-	-	-	21 27	197-400 217-254	62	18 (36.9)
		QR									257.2	129.2	218.2	65	63	30.2	16	9.8			-	
		QR/1									251.1	123.1	212.1	59	57	18.1	22	15.9				
DN65	2 1/2"	THREADED	925	2"	3/4" 1" 1 1/4"	1" 1 1/4"	185	25	80	62	287	148	232.5	-	-	-	-	-	21 27	210-464 216-235	80	28.5 (58.42)
		QR									277	138	222.5	85	82	41.5	16	10			-	
		QR/1									283.5	144.5	213.5	72.2	69	20	28.5	19				
DN80	3"	THREADED	930	2 1/2"	3/4" 1" 1 1/4" 1 1/2"	1" 1 1/4" 1 1/2"	200	30	95.5	73	343	189	273	-	-	-	-	-	27 33	235-495 241-489	91	37 (75.85)
		QR									-	-	-	-	-	-	-	-			-	
		QR/1									320.8	166.8	251	87.3	84	23.3	32	22.2				
DN100	4"	THREADED	940	2" 2 1/2" 3"	3/4" 1" 1 1/4" 1 1/2" 2"	1 1/2" 2"	257	35	141	98	433	251	364	-	-	-	-	-	33 41	300-465 308-457	118	64.5 (132.22
		QR									421	239	352	114	110	95	22	12			-	
		QR/1									407.6	225.6	339	112.70	109.5	65.6	38	25.40				
DN125	5"	THREADED	950	2" 2 1/2" 3" 4"	2" 2 1/2" 3"	1 1/2" 2" 2 1/2" 3"	330	35	150	122	486	275	411	-	-	-	-	-	54	400-457	146	106.6 (218.5)
		QR									451	240	376	150	145	56	39	35			-	
		QR/1									454	243	379	139.2	136	56	42	32				

900R SERIES - STYLE 40

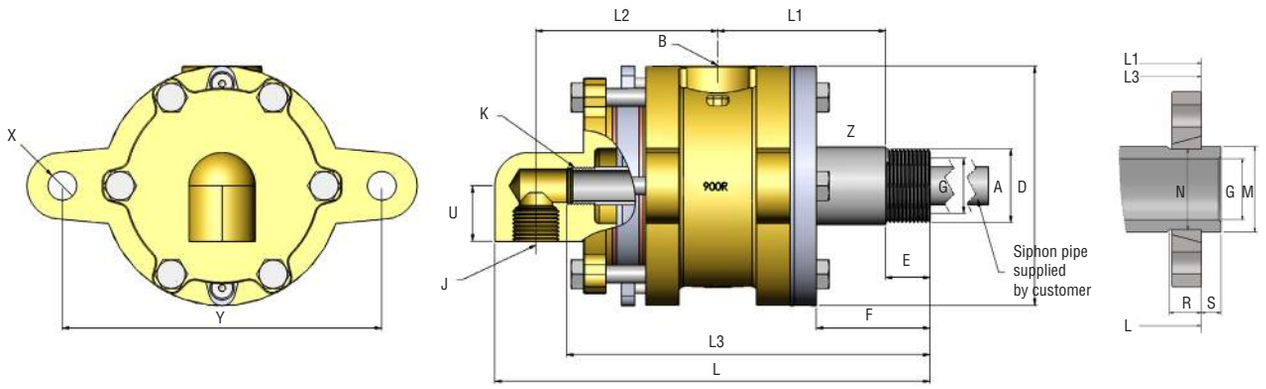

Z: 2xWrench Flats

A SIZE		A THREAD TYPE	MODEL	B	K	J	D	E	F	G	L	L1	L2	L3	M	N	P	R	S	U	X	Y (min-max)	Z	WEIGHT kg (lb)
DN15	1/2"	THREADED	905	1/4" 1/2"	1/8"	1/4"	80	18	38	15	156.5	77.5	69	138	-	-	-	-	-	15	10	95	21	2.25 (4.61)
		QR									150.5	71.5		132	24	22	23	11	6				-	
		QR/1									147	68		128.5	20.7	20	14.5	16	9.5					
DN20	3/4"	THREADED	907	1/2" 3/4"	1/8" 1/4"	1/2"	87	20	42	20	180	64	77.5	147.5	-	-	-	-	-	20	13	102-108	28	3.75 (7.68)
		QR									172	76		139	30	28	25.5	13	8				-	
		QR/1									168.9	72.9		136	26	24.5	18.4	17	11.1					
DN25	1"	THREADED	910	3/4"	1/4" 3/8"	1/2"	108	20	51	25	196.5	95	82	164.5	-	-	-	-	-	25	13 20	124-246 133-146	34	5.45 (11.17)
		QR									188	87		156	35	33	.27.5	13	8				-	
		QR/1									185	83.9		153	32.5	31	20.4	17	11.1					
DN32	1 1/4"	THREADED	912	1"	3/8" 1/2" 3/4"	1/2" 3/4"	116	23	57	32	218	105	87.5	178	-	-	-	-	-	34	13 20	130-222 152-165	43	7.15 (14.65)
		QR									210	97		170	45	43	29	13	8				-	
		QR/1									205.3	92.3		165	41.3	39.5	18.3	19	12.7					
DN40	1 1/2"	THREADED	915	1 1/4"	1/2" 3/4"	3/4"	152	23	71	40	257	128.5	101.5	215	-	-	-	-	-	35	21 27	171-257 202-257	52	13 (26.65)
		QR									247	118.5		205	50	48	29	16	10				-	
		QR/1									244.3	115.8		202	47.6	45	20.3	22	12.7					
DN50	2"	THREADED	920	1 1/2"	3/4" 1" 1 1/4"	1 1/4"	162	25	72	50	293	139	122	238	-	-	-	-	-	45	21 27	197-400 217-254	62	18 (36.9)
		QR									283.2	129.2		228	65	63	30.2	16	9.8				-	
		QR/1									277.1	123.1		223	59	57	18.1	22	15.9					
DN65	2 1/2"	THREADED	925	2"	3/4" 1" 1 1/4"	1" 1 1/4"	185	25	80	62	328	148	137	236	-	-	-	-	-	45	21 27	210-464 216-235	80	28.5 (58.42)
		QR									312	138		226	85	82	41.5	16	10				-	
		QR/1									309	144.5		219.5	72.2	69	20	28.5	19					
DN80	3"	THREADED	930	2 1/2"	3/4" 1" 1 1/4" 1 1/2"	1" 1 1/4" 1 1/2"	200	30	95.5	73	390	189	157.5	277	-	-	-	-	-	50	27 33	235-495 241-489	91	37 (75.85)
		QR									-	-		-	-	-	-	-	-				-	
		QR/1									367.8	166.8		255	87.3	84	23.3	32	22.2					
DN100	4"	THREADED	940	2" 2 1/2" 3"	3/4" 1" 1 1/4" 1 1/2" 2"	1 1/2" 2"	257	35	141	98	508	251	201	367	-	-	-	-	-	60	33 41	300-465 308-457	118	64.5 (132.22)
		QR									496	239		355	114	110	95	22	12				-	
		QR/1									482.6	225.6		342	112.70	109.5	65.6	38	25.40					
DN125	5"	THREADED	950	2" 2 1/2" 3" 4"	2" 2 1/2" 3"	1 1/2" 2" 2 1/2" 3"	330	35	150	122	600	275	245.5	410	-	-	-	-	-	85	54	400-457	146	106.6 (218.5)
		QR									565	240		375	150	145	56	39	35				-	
		QR/1									568	243		372	139.2	136	56	42	32					

900R SERIES - STYLE 50

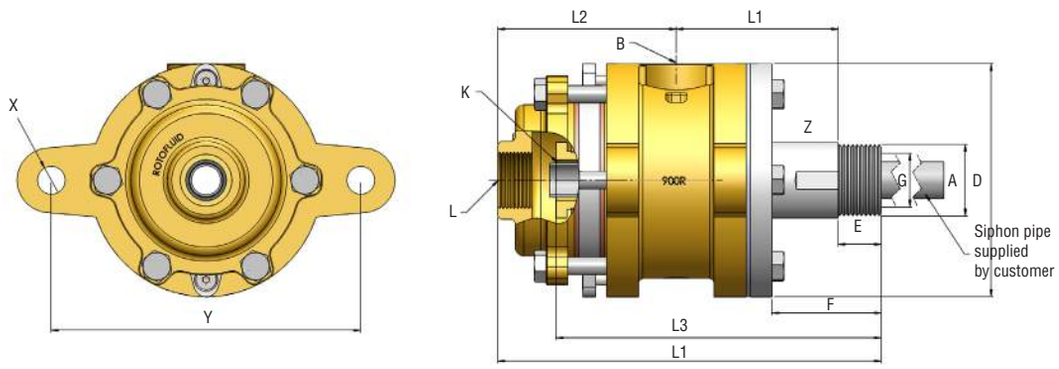

Z: 2xWrench Flats

A SIZE		A THREAD TYPE	MODEL	B (BSPP)	K (BSPP)	J (BSPP)	D	E	F	G	L	L1	L2	L3	M	N	P	R	S	X	Y (minmax)	Z	WEIGHT kg (lb)
DN15	1/2"	THREADED	905	1/4" 1/2"	1/8"	1/4"	80	18	38	15	143.5	77.5	66	132.5	-	-	-	-	-	10	95	21	3.1 (6.35)
		QR									137.5	71.5		119	24	22	23	11	6			-	
		QR/1									134.5	68		116	20.7	20	14.5	16	9.5				
DN20	3/4"	THREADED	907	1/2" 3/4"	1/8" 1/4"	1/2"	87	20	42	20	156.5	64	72.5	134	-	-	-	-	-	13	102-108	28	3.55 (7.27)
		QR									148.5	76		125.5	30	28	25.5	13	8			-	
		QR/1									145.4	72.9		122.5	26	24.5	18.4	17	11.1				
DN25	1"	THREADED	910	3/4"	1/4" 3/8"	1/2"	108	20	51	25	178	95	83	155.5	-	-	-	-	-	13 20	124-246 133-146	34	5.35 (10.96)
		QR									170	87		147.5	35	33	27.5	13	8			-	
		QR/1									166.9	83.9		144.4	32.5	31	20.4	17	11.1				
DN32	1 1/4"	THREADED	912	1"	3/8" 1/2" 3/4"	1/2" 3/4"	116	23	57	32	198	105	92.5	169	-	-	-	-	-	13 20	130-222 152-165	43	7.3 (14.96)
		QR									190	97		161	45	43	29	13	8			-	
		QR/1									185.3	92.3		156.3	41.3	39.5	18.3	19	12.7				
DN40	1 1/2"	THREADED	915	1 1/4"	1/2" 3/4"	3/4"	152	23	71	40	237	128.5	108.5	203	-	-	-	-	-	21 27	171-257 202-257	52	13.5 (27.67)
		QR									227	118.5		193	50	48	29	16	10			-	
		QR/1									224.3	115.8		190.3	47.6	45	20.3	22	12.7				
DN50	2"	THREADED	920	1 1/2"	3/4" 1" 1 1/4"	1 1/4"	162	25	72	50	266	139	127	225	-	-	-	-	-	21 27	197-400 217-254	62	18.5 (37.92)
		QR									256.2	129.2		215.2	65	63	30.2	16	9.8			-	
		QR/1									250.1	123.1		209.1	59	57	18.1	22	15.9				
DN65	2 1/2"	THREADED	925	2"	3/4" 1" 1 1/4"	1" 1 1/4"	185	25	80	62	290	148	141.5	245	-	-	-	-	-	21 27	210-464 216-235	80	29 (59.45)
		QR									280	138		235	85	82	.41.5	16	10			-	
		QR/1									286.5	144.5		241.5	72.2	69	20	28.5	19				
DN80	3"	THREADED	930	2 1/2"	3/4" 1" 1 1/4" 1 1/2"	1" 1 1/4" 1 1/2"	200	30	95.5	73	345	189	156.5	303	-	-	-	-	-	27 33	235-495 241-489	91	38 (77.9)
		QR									-	-		-	-	-	-	-	-			-	
		QR/1									322.8	166.8		280.8	87.3	84	23.3	32	22.2				
DN85	3 1/2"	THREADED	935	3"	3/4" 1" 1 1/4" 1 1/2"	1 1/4" 1 1/2" 2	227	NA	96	85	-	-	172	-	-	-	-	-	-	33 41	279-505 287-497	NA	48.5 (99.42)
		QR									362	190		322	105	102	64	20	12				
		QR/1									342	170		302	99.8	96.45	38.6	25.4	32				
	4"	THREADED	940	2" 2 1/2" 3"	3/4" 1" 1 1/4" 1 1/2" 2"	1 1/2" 2"	257	35	141	98	483	251	232	388	-	-	-	-	-	33 41	300-465 308-457	118	67
		QR									471	239		376	114	110	95	22	12			-	
		QR/1									457.6	225.6		362.6	112.70	109.5	65.6	38	25.40				
	5"	THREADED	950	2" 2 1/2" 3" 4"	2" 2 1/2" 3"	1 1/2" 2" 2 1/2" 3"	330	35	150	122	527	275	251.5	436	-	-	-	-	-	54	400-457	146	108 (221.4)
		QR									492	240		401	150	145	56	39	35			-	
		QR/1									495	243		404	139.2	136	56	42	32				

900R SERIES - STYLE 60

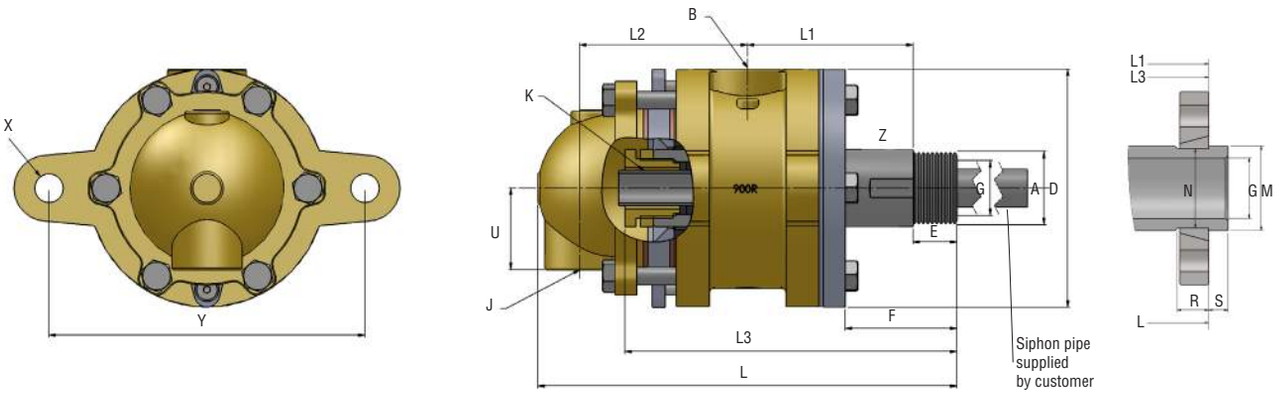

Z: 2xWrench Flats

A SIZE		A THREAD TYPE	MODEL	B (BSPP)	K (BSPP)	J (BSPP)	D	E	F	G	L	L1	L2	L3	M	N	P	R	S	U	X	Y (min-max)	Z	WEIGHT kg (lb)
DN15	1/2"	THREADED	905	1/4" 1/2"	1/8"	1/4"	80	18	38	15	158	77.5	67	130.5	-	-	-	-	-	27.5	10	95	21	3.1 (6.35)
		QR									152	71.5		124.5	24	22	23	11	6				-	
		QR/1									148.5	68		121	20.7	20	14.5	16	9.5					
DN20	3/4"	THREADED	907	1/2" 3/4"	1/8" 1/4"	1/2"	87	20	42	20	172	84	71.5	142	-	-	-	-	-	29.5	13	102-108	28	3.55 (7.27)
		QR									164	76		134	30	28	25.5	13	8				-	
		QR/1									170.9	72.9		140.9	26	24.5	18.4	17	11.1					
DN25	1"	THREADED	910	3/4"	1/4" 3/8"	1/2"	108	20	51	25	191	75.5	76.5	156	-	-	-	-	-	37	13 20	124-246 133-146	34	5.35 (10.96)
		QR									182	87		147	35	33	27.5	13	8				-	
		QR/1									179.9	83.9		144.9	32.5	31	20.4	17	11.1					
DN32	1 1/4"	THREADED	912	1"	3/8" 1/2" 3/4"	1/2" 3/4"	116	23	57	32	212	85	83.5	171	-	-	-	-	-	41	13 20	130-222 152-165	43	7.3 (14.96)
		QR									204	77		163	45	43	29	13	8				-	
		QR/1									201	74		160	41.3	39.5	18.3	19	12.7					
DN40	1 1/2"	THREADED	915	1 1/4"	1/2" 3/4"	3/4"	152	23	71	40	255	128.5	98.5	202.5	-	-	-	-	-	55	21 27	171-257 202-257	52	13.5 (27.67)
		QR									245	118.5		192.5	50	48	29	16	10				-	
		QR/1									242.3	115.8		189.8	47.6	45	20.3	22	12.7					
DN50	2"	THREADED	920	1 1/2"	3/4" 1" 1 1/4"	1 1/4"	162	25	72	50	284.5	139	114	227	-	-	-	-	-	56	21 27	197-400 217-254	62	18.5 (37.92)
		QR									274.7	129.2		217.2	65	63	30.2	16	9.8				-	
		QR/1									268.6	123.1		211.1	59	57	18.1	22	15.9					
DN65	2 1/2"	THREADED	925	2"	3/4" 1" 1 1/4"	1" 1 1/4"	185	25	80	62	310	147.5	128.5	245	-	-	-	-	-	62.5	21 27	210-464 216-235	80	29 (59.45)
		QR									300	137.5		235	85	82	.41.5	16	10				-	
		QR/1									306.5	144		241.5	72.2	69	20	28.5	19					
DN80	3"	THREADED	930	2 1/2"	3/4" 1" 1 1/4" 1 1/2"	1" 1 1/4" 1 1/2"	200	30	95.5	73	368	189	144.5	300.5	-	-	-	-	-	71.5	27 33	235-495 241-489	91	38 (77.9)
		QR									-	-		-	-	-	-	-	-				-	
		QR/1									345.8	166.8		278.3	87.3	84	23.3	32	22.2					
DN85	3 1/2"	THREADED	935	3"	3/4 1" 1 1/4" 1 1/2"	1 1/4" 1 1/2" 2	227	NA	96	85	-	-	160	-	-	-	-	-	-	85	33 41	279-505 287-497	NA	48.5 (99.42)
		QR									406	190		321	105	102	64	20	12					
		QR/1									386	170		301	99.8	96.45	38.6	25.4	32					
DN100	4"	THREADED	940	2" 2 1/2" 3"	3/4" 1" 1 1/4" 1 1/2" 2"	1 1/2" 2"	257	35	141	98	478	251	177	401	-	-	-	-	-	90	33 41	300-465 308-457	118	67 (137.35)
		QR									466	239		389	114	110	95	22	12				-	
		QR/1									452.6	225.6		375.6	112.70	109.5	.65.6	38	25.40					
DN125	5"	THREADED	950	2 2 1/2" 3" 4"	2" 2 1/2" 3"	1 1/2" 2" 2 1/2" 3"	330	35	150	122	563	275	225.5	435.5	-	-	-	-	-	127.5	54	400-457	146	108 (221.4)
		QR									528	240		400.5	150	145	56	39	35				-	
		QR/1									531	243		403.5	139.2	136	56	42	32					

900R SPARE PARTS LIST

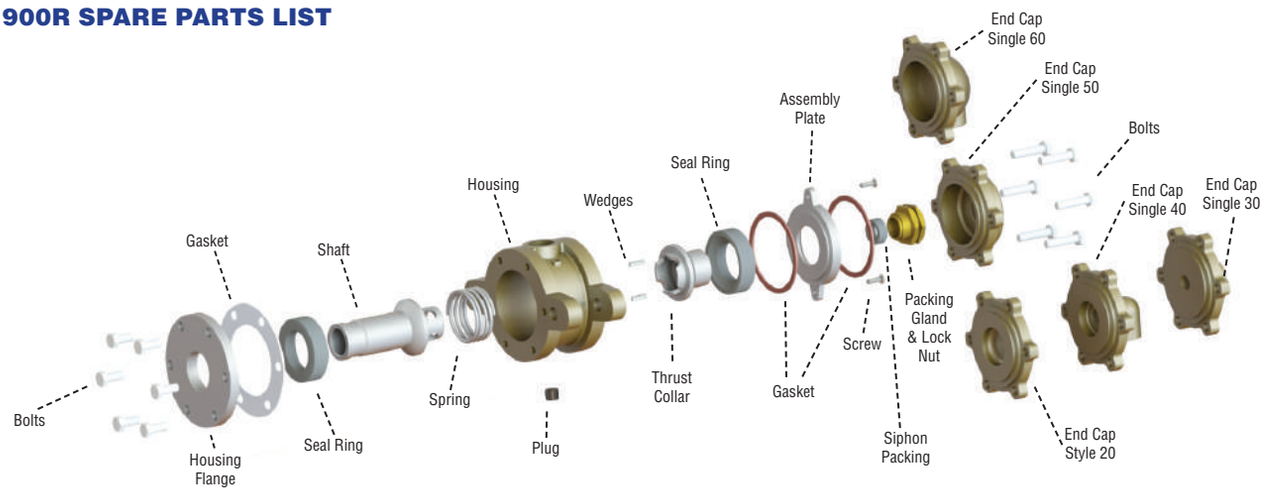

PART NAME / SIZE	1/2"	3/4"	1"	1 1/4"	1 1/2"	2"	2 1/2"	3"	3 1/2"	4"	5"
HOUSING	RY0892105XXXX00	RY0892107XXXX00	RY0892110XXXX00	RY0892112XXXX00	RY0892115XXXX00	RY0892120XXXX00	RY0892125XXXX00	RY0892130XXXX00	RY0892135XXXX00	RY0892140XXXX00	RY0892150XXXX00
END CAP STYLE 20	RY0902105000000	RY0902107000000	RY0902110000000	RY0902112000000	RY0902115000000	RY0902120000000	RY0902125000000	RY0902130000000	RY0902135000000	RY0902140000000	RY0902150000000
END CAP STYLE 30	RY092205XXXXXXX	RY092207XXXXXXX	RY092210XXXXXXX	RY092212XXXXXXX	RY092215XXXXXXX	RY092220XXXXXXX	RY092225XXXXXXX	RY092230XXXXXXX	RY092235XXXXXXX	RY092240XXXXXXX	RY092250XXXXXXX
END CAP STYLE 40	RY093205XXXXXXX	RY093207XXXXXXX	RY093210XXXXXXX	RY093212XXXXXXX	RY093215XXXXXXX	RY093220XXXXXXX	RY093225XXXXXXX	RY093230XXXXXXX	RY093235XXXXXXX	RY093240XXXXXXX	RY093250XXXXXXX
END CAP STYLE 50	RY0942105XXXX00	RY0942107XXXX00	RY0942110XXXX00	RY0942112XXXX00	RY0942115XXXX00	RY0942120XXXX00	RY0942125XXXX00	RY0942130XXXX00	RY0942135XXXX00	RY0942140XXXX00	RY0942150XXXX00
END CAP STYLE 60	RY0952105XXXX00	RY0952107XXXX00	RY0952110XXXX00	RY0952112XXXX00	RY0952115XXXX00	RY0952120XXXX00	RY0952125XXXX00	RY0952130XXXX00	RY0952135XXXX00	RY0952140XXXX00	RY0952150XXXX00
SHAFT-NPT-RH (STY30-40)	RY09712105R0000	RY09712107R0000	RY09712110R0000	RY09712112R0000	RY09712115R0000	RY09712120R0000	RY09712125R0000	RY09712130R0000	RY09712135R0000	RY09712140R0000	RY09712150R0000
SHAFT-NPT-LH (STY30-40)	RY09712105L0000	RY09712107L0000	RY09712110L0000	RY09712112L0000	RY09712115L0000	RY09712120L0000	RY09712125L0000	RY09712130L0000	RY09712135L0000	RY09712140L0000	RY09712150L0000
SHAFT-BSP-RH (STY30-40)	RY09712305R0000	RY09712307R0000	RY09712310R0000	RY09712312R0000	RY09712315R0000	RY09712320R0000	RY09712325R0000	RY09712330R0000	RY09712335R0000	RY09712340R0000	RY09712350R0000
SHAFT-BSP-LH (STY30-40)	RY09712305L0000	RY09712307L0000	RY09712310L0000	RY09712312L0000	RY09712315L0000	RY09712320L0000	RY09712325L0000	RY09712330L0000	RY09712335L0000	RY09712340L0000	RY09712350L0000
SHAFT-QR (STY30-40)	RY0971205000000	RY0971207000000	RY0971210000000	RY0971212000000	RY0971215000000	RY0971220000000	RY0971225000000	RY0971230000000	RY0971235000000	RY0971240000000	RY0971250000000
SHAFT-QR/NO1 (STY30-40)	RY0971205010000	RY0971207010000	RY0971210100000	RY0971212010000	RY0971215010000	RY0971220100000	RY0971225010000	RY0971230100000	RY0971235010000	RY0971240100000	RY0971250100000
SHAFT-NPT-RH (STY50-60)	RY09612105R0000	RY09612107R0000	RY09612110R0000	RY09612112R0000	RY09612115R0000	RY09612120R0000	RY09612125R0000	RY09612130R0000	RY09612135R0000	RY09612140R0000	RY09612150R0000
SHAFT-NPT-LH (STY40-50)	RY09612105L0000	RY09612107L0000	RY09612110L0000	RY09612112L0000	RY09612115L0000	RY09612120L0000	RY09612125L0000	RY09612130L0000	RY09612135L0000	RY09612140L0000	RY09612150L0000
SHAFT-BSP-RH (STY50-60)	RY09612305R0000	RY09612307R0000	RY09612310R0000	RY09612312R0000	RY09612315R0000	RY09612320R0000	RY09612325R0000	RY09612330R0000	RY09612335R0000	RY09612340R0000	RY09612350R0000
SHAFT-BSP-LH (STY50-60)	RY09612305L0000	RY09612307L0000	RY09612310L0000	RY09612312L0000	RY09612315L0000	RY09612320L0000	RY09612325L0000	RY09612330L0000	RY09612335L0000	RY09612340L0000	RY09612350L0000
SHAFT-QR (STY50-60)	RY0961205000000	RY0961207000000	RY0961210000000	RY0961212000000	RY0961215000000	RY0961220000000	RY0961225000000	RY0961230000000	RY0961235000000	RY0961240000000	RY0961250000000
SHAFT-QR/NO1 (STY50-60)	RY0961205010000	RY0961207010000	RY0961210100000	RY0961212010000	RY0961215010000	RY0961220100000	RY0961225010000	RY0961230100000	RY0961235010000	RY0961240100000	RY0961250100000
FRONT HOUSING BOLTS	HD0240101008000	HD0240101008000	HD0240101012000	HD0240101012000	HD0240101016000	HD0240101020000	HD0240101021000	HD0240101022000	HD0240101027000	HD0240101030000	HD0240101030000
FRONT HOUSING FLANGE	RY0950102050000	RY0950102070000	RY0950102100000	RY0950102120000	RY0950102150000	RY0950102200000	RY0950102250000	RY0950102320000	RY0950102350000	RY0950102400000	RY0950102500000
FRONT HOUSING FLANGE GASKET	HD0010302004000	HD0010302005000	HD00103020106000	HD0010302007000	HD0010302008000	HD0010302009000	HD0010302010000	HD0010302011000	HD0010302012000	HD0010302013000	HD0010302014000
SEAL RING	HD0020302004000	HD0020302005000	HD0020302006000	HD0020302007000	HD0020302008000	HD0020302009000	HD0020302010000	HD0020302011000	HD0020302012000	HD0020302013000	HD0020302014000
HO SEAL RING	HD0020303004000	HD0020303005000	HD0020303006000	HD0020303007000	HD0020303008000	HD0020303009000	HD0020303010000	HD0020303011000	HD0020303012000	HD0020303013000	HD0020303014000
SPRING	HD0150001060000	HD0150001061000	HD0150001062000	HD0150001063000	HD0150001064000	HD0150001065000	HD0150001066000	HD0150001067000	HD0150001068000	HD0150001069000	HD0150001070000
THRUST COLLAR (STY20-30-40)	RY09812XXXXXXXX	RY09812XXXXXXXX	RY09812XXXXXXXX	RY09812XXXXXXXX	RY09812XXXXXXXX	RY09812XXXXXXXX	RY09812XXXXXXXX	RY09812XXXXXXXX	RY09812XXXXXXXX	RY09812XXXXXXXX	RY09812XXXXXXXX
THRUST COLLAR (STY50-60)	RY0990102015000	RY0990102020000	RY0990102025000	RY0990102032000	RY0990102040000	RY0990102050000	RY0990102065000	RY0990102080000	RY0990102085000	RY0990102100000	RY0990102125000
WEDGES	HD0340101001000	HD0340101001000	HD0340101001000	HD0340101002000	HD0340101003000	HD0340101004000	HD0340101005000	HD0340101005000	HD0340101006000	HD0340101006000	HD0340101006000
ASSEMBLY PLATE GASKET	HD0010403004000	HD0010403005000	HD00104030106000	HD0010403007000	HD0010403008000	HD0010403009000	HD0010403010000	HD0010403011000	HD0010403012000	HD0010403013000	HD0010403014000
SIPHON PACKING	HD0110001XXXXXX	HD0110001XXXXXX	HD0110001XXXXXX	HD0110001XXXXXX	HD0110001XXXXXX	HD0110001XXXXXX	HD0110001XXXXXX	HD0110001XXXXXX	HD0110001XXXXXX	HD0110001XXXXXX	HD0110001XXXXXX
PACKING GLAND	RY1000201XXXXXX	RY1000201XXXXXX	RY1000201XXXXXX	RY1000201XXXXXX	RY1000201XXXXXX	RY1000201XXXXXX	RY1000201XXXXXX	RY1000201XXXXXX	RY1000201XXXXXX	RY1000201XXXXXX	RY1000201XXXXXX
LOCK NUT	RY1010201XXXXXX	RY1010201XXXXXX	RY1010201XXXXXX	RY1010201XXXXXX	RY1010201XXXXXX	RY1010201XXXXXX	RY1010201XXXXXX	RY1010201XXXXXX	RY1010201XXXXXX	RY1010201XXXXXX	RY1010201XXXXXX
ASSEMBLY PLATE	RY0880103201500	RY0880103202000	RY0880103202500	RY0880103203200	RY0880103204000	RY0880103205000	RY0880103206500	RY0880103208000	RY0880103208500	RY0880103210000	RY0880103212500
SCREWS	HD0240501001000	HD0240501001000	HD0240501004000	HD0240501007000	HD0240501007000	HD0240501011000	HD0240501011000	HD0240501012000	HD0240501017000	HD0240501017000	HD0240501052000
BOLTS	HD0240101036000	HD0240101036000	HD0240101015000	HD0240101015000	HD0240101018000	HD0240101024000	HD0240101025000	HD0240101025000	HD0240101028000	HD0240101032000	HD0240101032000

900P SERIES

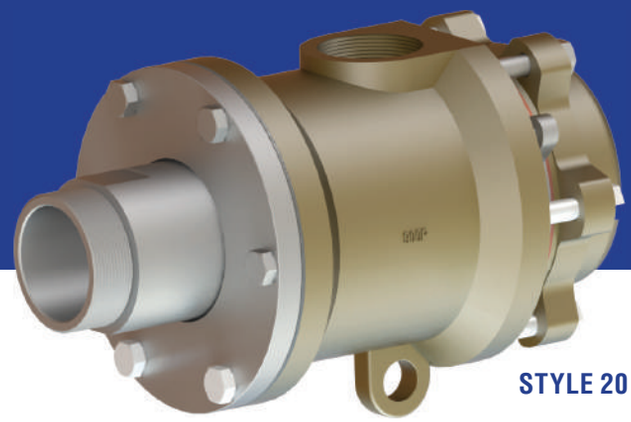

STYLE 20

For STEAM, HOT OIL, WATER
1/2" (DN15) – 5" (DN125)

- Self supported rotating joint
- Dual flow – RSP Type
- Cast iron housing
- Nickel plated steel shaft
- Torque lugs on housing
- Seal wear indicator on shaft

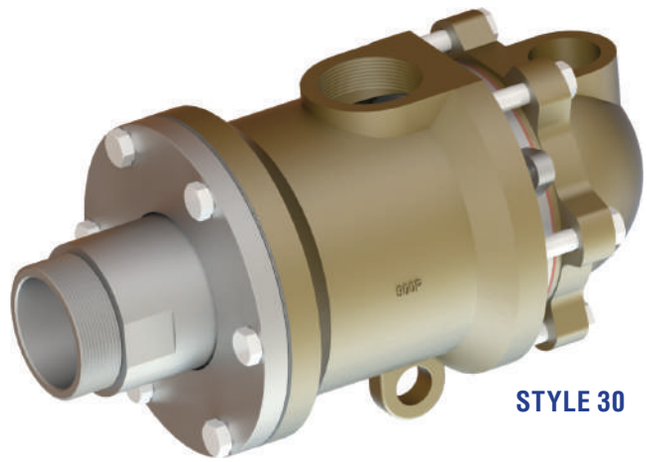

STYLE 30

Application Parameters

Max. Steam Pressure	: 17 bar	250psi
Max. Steam Tempereture	: 200°C	400°F
Max. Hot Oil Pressure*	: 10 bar	150psi
Max. Hot Oil Tempereture*	: 315°C	600°F
Max. Speed	: 100 RPM	100 min^{-1}

*Only for 900P-HO Models

Avoid working with max. speed at max. pressure

For further information, please consult FACTORY, or your local representative.

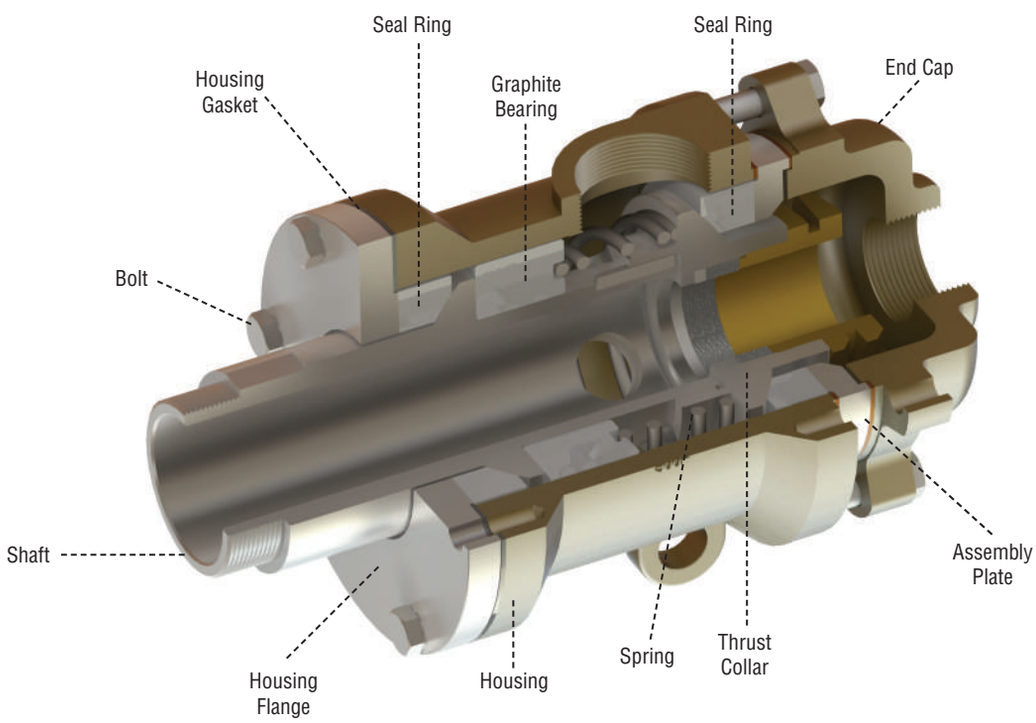

900P SERIES
STYLE 20

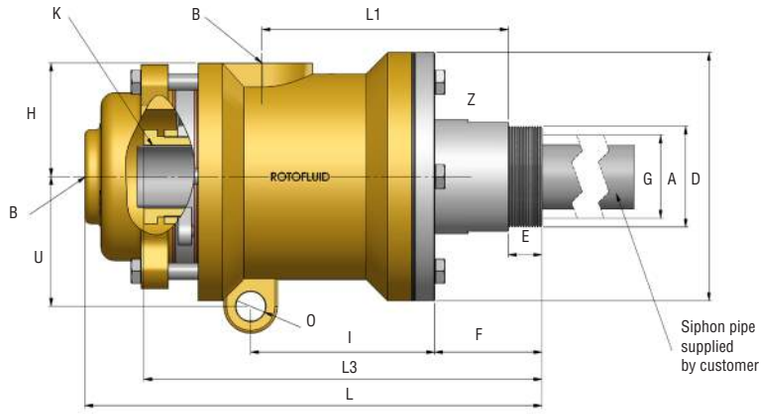

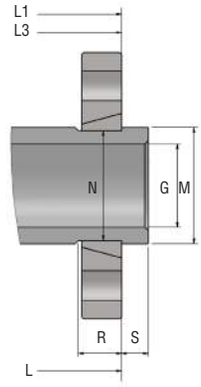

Z: 2xWrench Flats

A			MODEL	B	K	J	D	E	F	G	H	I	L	L1	L3	M	N	O	P	R	S	U	Z	WEIGHT kg (lb)
SIZE		THREAD TYPE																						
DN15	1/2"	THREADED	905	1/4" 1/2"	1/8"	1/4"	80	18	38	15	37.5	70	170	105	143.5	-	-	10	-	-	-	41	21	2.1 (4.3)
		QR											164.5	99.5	138	24	22		23	11	6		-	
		QR/1											161.5	96.5	135	20.7	20		14.5	16	9.5			
DN20	3/4"	THREADED	907	1/2 3/4"	1/8" 1/4"	1/2"	87	20	42	20	41	76	179	113	158	-	-	10	-	-	-	45.5	28	3.6 (7.38)
		QR											170.5	104.5	149.5	30	28		25.5	13	8		-	
		QR/1											167.5	101.5	146.5	26	24.5		18.4	17	11.1			
DN25	1"	THREADED	910	3/4"	1/4" 3/8"	1/2"	108	20	51	25	51	87.5	209	130.5	180.5	-	-	10	-	-	-	57	34	5.35 (10.96)
		QR											200.5	122	172	35	33		27.5	13	8		-	
		QR/1											197.5	119	169	32.5	31		20.4	17	11.1			
DN32	1 1/4"	THREADED	912	1"	3/8" 1/2" 3/4"	1/2" 3/4"	116	23	57	32	54.5	95	230	145	203	-	-	14	-	-	-	63.5	43	6.85 (14.04)
		QR											222	137	195	45	43		29	13	8		-	
		QR/1											217	132	200	41.3	39.5		18.3	19	12.7			
DN40	1 1/2"	THREADED	915	1 1/4"	1/2" 3/4"	3/4"	152	23	71	40	72	110.5	270	171	235	-	-	18	-	-	-	79	52	12.8 (26.24)
		QR											260	161	225	50	48		29	16	10		-	
		QR/1											257	158	222	47.6	45		20.3	22	12.7			
DN50	2"	THREADED	920	1 1/2"	3/4" 1" 1 1/4"	1 1/4"	162	25	72	50	76	124.5	297	182	258.5	-	-	18	-	-	-	83	62	15.9 (32.59)
		QR											287	172	248.5	65	63		30.2	16	9.8		-	
		QR/1											281.5	166.5	243	59	57		18.1	22	15.9			
DN65	2 1/2"	THREADED	925	2"	3/4" 1" 1 1/4"	1" 1 1/4"	185	25	80	62	84.5	137	340	183	271	-	-	22	-	-	-	96.5	80	25.5 (52.27)
		QR											330	173	261	85	82		41.5	16	10		-	
		QR/1											336.5	179.5	267.5	72.2	69		20	28.5	19			
DN80	3"	THREADED	930	2 1/2"	3/4" 1" 1 1/4" 1 1/2"	1" 1 1/4" 1 1/2"	200	30	95.5	73	88	149.5	378	237	332	-	-	28	-	-	-	103.5	91	33 (67.65)
		QR											-	-	-	-	-		-	-	-		-	
		QR/1											355	215	310	87.3	84		23.3	32	22.2			
DN85	3 1/2"	THREADED	935	3"	3/4" 1" 1 1/4" 1 1/2"	1 1/4" 1 1/2" 2"	227	NA	96	85	98	178	-	-	-	-	-	28	-	-	-	112	NA	45 (92.25)
		QR											399	240	426	105	102		64	20	12		-	
		QR/1											399	240	426	99.8	96.45		38.6	32	25.4			
DN100	4"	THREADED	940	2" 2 1/2" 3"	3/4" 1" 1 1/4" 1 1/2" 2"	1 1/2" 2"	257	35	141	98	115	191	325	315	441	-	-	28	-	-	-	129.5	118	62 (127.1)
		QR											513	303	429	114	110		95	22	12		-	
		QR/1											500	290	416	112.70	109.5		65.6	38	25.40			
DN125	5"	THREADED	950	2" 2 1/2" 3" 4"	2" 2 1/2" 3"	1 1/2" 2" 2 1/2" 3"	330	35	150	122	150	241	558	356	487	-	-	28	-	-	-	168	146	107.5 (220.37)
		QR											523	321	452	150	145		56	39	35		-	
		QR/1											526	324	455	139.2	136		56	42	32			

900P SERIES
SYLE 30

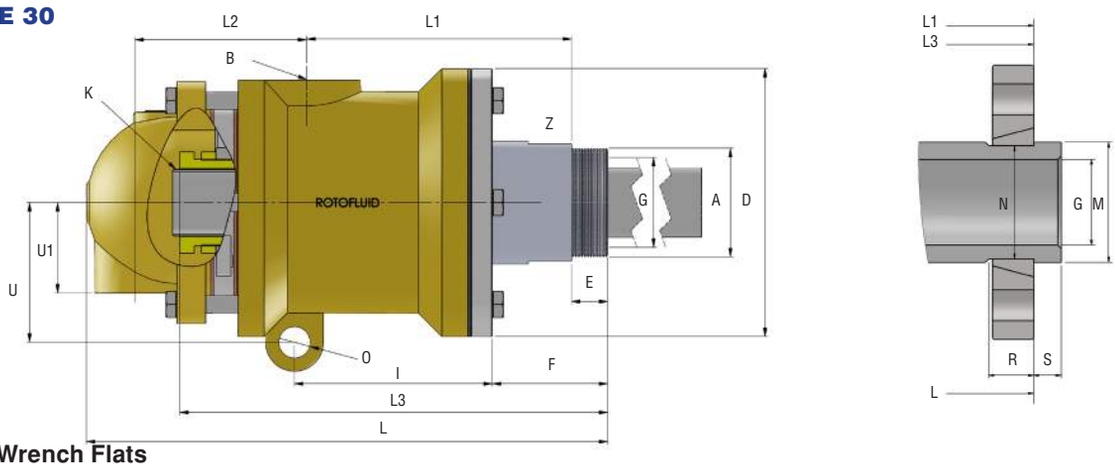

Z: 2xWrench Flats

A SIZE		A THREAD TYPE	MODEL	B	K	J	D	E	F	G	H	I	L	L1	L2	L3	M	N	O	P	R	S	U	U1	Z	WEIGHT kg (lb)
DN15	1/2"	THREADED	905	1/4" 1/2"	1/8"	1/4"	80	18	38	15	37.5	70	180	105	60	143.5	-	-	10	-	-	-	41	27.5	21	3.15 (6.45)
		QR											174	99.5		138	24	22		23	11	6			-	
		QR/1											170.5	96.5		135	20.7	20		14.5	16	.9.5				
DN20	3/4"	THREADED	907	1/2" 3/4"	1/8" 1/4"	1/2"	87	20	42	20	41	76	193.5	113	65	158	-	-	10	-	-	-	45.5	29.5	28	3.9 (7.99)
		QR											185	104.5		149.5	30	28		25.5	13	8			-	
		QR/1											182.4	101.5		146.5	.26	.24.5		18.4	17	11.1				
DN25	1"	THREADED	910	3/4"	1/4" 3/8"	1/2"	108	20	51	25	51	87.5	221	130.5	72	180.5	-	-	10	-	-	-	57	37	34	5.25 (10.76)
		QR											213	122		172	35	33		.27.5	13	8			-	
		QR/1											209.9	119		169	32.5	31		20.4	17	11.1				
DN32	1 1/4"	THREADED	912	1"	3/8" 1/2" 3/4"	1/2" 3/4"	116	23	57	32	54.5	95	242	145	76	203	-	-	14	-	-	-	63.5	41	43	6.85 (14.04)
		QR											234	137		195	45	43		29	13	8			-	
		QR/1											229.3	132		200	41.3	39.5		18.3	19	12.7				
DN40	1 1/2"	THREADED	915	1 1/4"	1/2" 3/4"	3/4"	152	23	71	40	72	110.5	288.5	171	89	235	-	-	18	-	-	-	79	55	52	12.8 (26.24)
		QR											278.5	161		225	50	48		29	16	10			-	
		QR/1											275.8	158		222	47.6	45		20.3	22	12.7				
DN50	2"	THREADED	920	1 1/2"	3/4" 1" 1 1/4"	1 1/4"	162	25	72	50	76	124.5	315.5	182	102	258.5	-	-	18	-	-	-	83	56	62	15.8 (32.39)
		QR											305.7	172		248.5	65	63		30.2	16	9.8			-	
		QR/1											299.6	166.5		243	59	57		18.1	22	15.9				
DN65	2 1/2"	THREADED	925	2"	3/4" 1" 1 1/4"	1" 1 1/4"	185	25	80	62	84.5	137	361	183	119	271	-	-	22	-	-	-	96.5	62.5	80	30 (61.5)
		QR											351	173		261	85	82		41.5	16	10			-	
		QR/1											342	179.5		267.5	72.2	69		20	28.5	19				
DN80	3"	THREADED	930	2 1/2"	3/4" 1" 1 1/4" 1 1/2"	1" 1 1/4" 1 1/2"	200	30	95.5	73	88	149.5	402.5	237	128.5	332	-	-	28	-	-	-	103.5	71.5	91	32 (65.6)
		QR											-	-		-	-	-		-	-	-			-	
		QR/1											380.5	215		310	87.3	84		23.3	32	22.2				
DN85	3 1/2"	THREADED	935	3"	3/4" 1" 1 1/4" 1 1/2"	1 1/4" 1 1/2" 2"	227	NA	96	85	98	178	-	-	145	-	-	-		-	-	-	112	85	NA	45 (92.25)
		QR											441.5	240		426	105	102		64	20	12				
		QR/1											441.5	240		426	99.8	96.45		38.6	25.4	32				
DN100	4"	THREADED	940	2" 2 1/2" 3"	3/4" 1" 1 1/4" 1 1/2" 2"	1 1/2" 2"	257	35	141	98	115	191	520	315	155	441	-	-	28	-	-	-	129.5	90	118	60 (123)
		QR											508	303		429	114	110		95	22	12			-	
		QR/1											495	290		416	112.70	109.5		65.6	38	25.40				
DN125	5"	THREADED	950	2" 2 1/2" 3" 4"	2" 2 1/2" 3"	1 1/2" 2" 2 1/2" 3"	330	35	150	122	150	241	660	356	206	487	-	-	28	-	-	-	168	127.5	146	111 (227.55)
		QR											625	321		452	150	145		56	39	35			-	
		QR/1											628	324		455	139.2	136		56	42	32				

900P SERIES - SPARE PARTS LIST

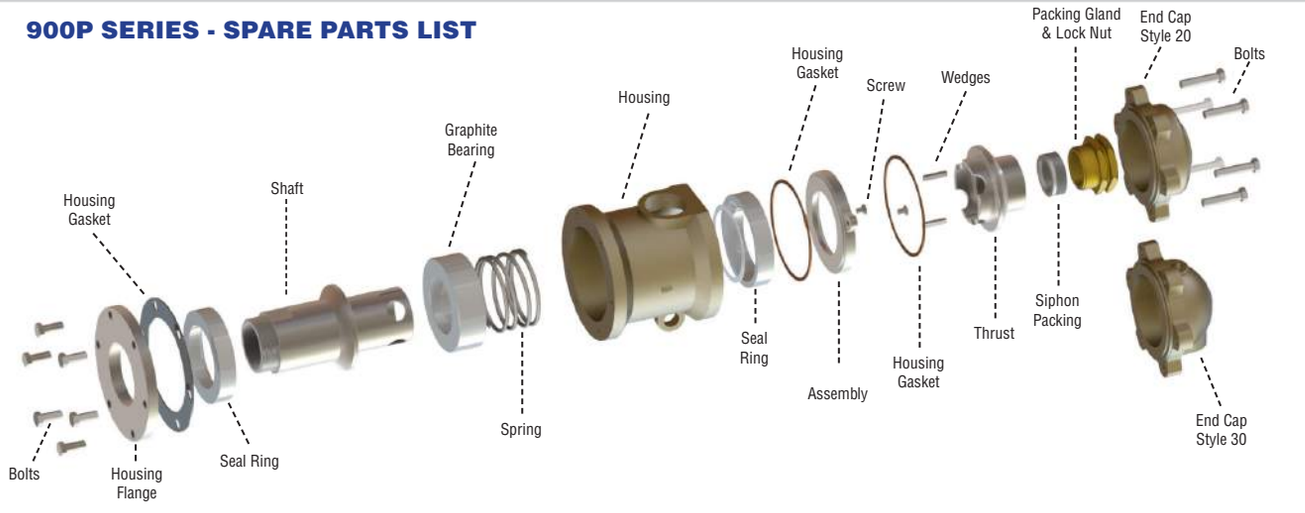

PART NAME / SIZE	1/2"	3/4"	1"	1 1/4"	1 1/2"	2"	2 1/2"	3"	3 1/2"	4"	5"
HOUSING	RY07721XXXXXX00	RY07721XXXXXX00	RY07721XXXXXX00	RY07721XXXXXX00	RY07721XXXXXX00	RY07721XXXXXX00	RY07721XXXXXX00	RY07721XXXXXX00	RY07721XXXXXX00	RY07721XXXXXX00	RY07721XXXXXX00
END CAP-STYLE 20	RY0932105XXXX00	RY0932107XXXX00	RY0932110XXXX00	RY0932112XXXX00	RY0932115XXXX00	RY0932120XXXX00	RY0932125XXXX00	RY0932130XXXX00	RY0932135XXXX00	RY0932140XXXX00	RY0932150XXXX00
END CAP-STYLE 30	RY0942105XXXX00	RY0942107XXXX00	RY0942110XXXX00	RY0942112XXXX00	RY0942115XXXX00	RY0942120XXXX00	RY0942125XXXX00	RY0942130XXXX00	RY0942135XXXX00	RY0942140XXXX00	RY0942150XXXX00
SHAFT-NPT-RH	RY09712105R0000	RY09712107R0000	RY09712110R0000	RY09712112R0000	RY09712115R0000	RY09712120R0000	RY09712125R0000	RY09712130R0000	RY09712135R0000	RY09712140R0000	RY09712150R0000
SHAFT-NPT-LH	RY09712105L0000	RY09712107L0000	RY09712110L0000	RY09712112L0000	RY09712115L0000	RY09712120L0000	RY09712125L0000	RY09712130L0000	RY09712135L0000	RY09712140L0000	RY09712150L0000
SHAFT-BSP-RH	RY09712305R0000	RY09712307R0000	RY09712310R0000	RY09712312R0000	RY09712315R0000	RY09712320R0000	RY09712325R0000	RY09712330R0000	RY09712335R0000	RY09712340R0000	RY09712350R0000
SHAFT-BSP-LH	RY09712305L0000	RY09712307L0000	RY09712310L0000	RY09712312L0000	RY09712315L0000	RY09712320L0000	RY09712325L0000	RY09712330L0000	RY09712335L0000	RY09712340L0000	RY09712350L0000
SHAFT-QR	RY0971205000000	RY0971207000000	RY0971210000000	RY0971212000000	RY0971215000000	RY0971220000000	RY0971225000000	RY0971230000000	RY0971235000000	RY0971240000000	RY0971250000000
SHAFT-QR/NO1	RY0971205010000	RY0971207010000	RY0971210100000	RY0971212010000	RY0971215010000	RY0971220100000	RY0971225010000	RY0971230100000	RY0971235010000	RY0971240100000	RY0971250100000
BOLTS	HD0240101008000	HD0240101008000	HD0240101012000	HD0240101012000	HD0240101016000	HD0240101020000	HD0240101021000	HD0240101022000	HD0240101027000	HD0240101030000	HD0240101030000
FRONT HOUSING FLANGE	RY0950201050000	RY0950201070000	RY0950201100000	RY0950201120000	RY0950201150000	RY0950201200000	RY0950201250000	RY0950201320000	RY0950201350000	RY0950201400000	RY0950201500000
FRONT HOUSING FLANGE GASKET	HD0010302004000	HD0010302005000	HD00103020106000	HD0010302007000	HD0010302008000	HD0010302009000	HD0010302010000	HD0010302011000	HD0010302012000	HD0010302013000	HD0010302014000
SEAL RING	HD0020302004000	HD0020302005000	HD0020302006000	HD0020302007000	HD0020302008000	HD0020302009000	HD0020302010000	HD0020302011000	HD0020302012000	HD0020302013000	HD0020302014000
HO SEAL RING	HD0020303004000	HD0020303005000	HD0020303006000	HD0020303007000	HD0020303008000	HD0020303009000	HD0020303010000	HD0020303011000	HD0020303012000	HD0020303013000	HD0020303014000
GRAPHITE BEARING	HD0030402004000	HD0030402005000	HD0030402006000	HD0030402007000	HD0030402008000	HD0030402009000	HD0030402010000	HD0030402011000	HD0030402012000	HD0030402113000	HD0030402214000
SPRING	HD0150001060000	HD0150001061000	HD0150001062000	HD0150001063000	HD0150001064000	HD0150001065000	HD0150001066000	HD0150001067000	HD0150001068000	HD0150001069000	HD0150001070000
THRUST COLLAR	RY09912XXXXXXXX	RY09912XXXXXXXX	RY09912XXXXXXXX	RY09912XXXXXXXX	RY09912XXXXXXXX	RY09912XXXXXXXX	RY09912XXXXXXXX	RY09912XXXXXXXX	RY09912XXXXXXXX	RY09912XXXXXXXX	RY09912XXXXXXXX
WEDGES	HD0340101001000	HD0340101001000	HD0340101001000	HD0340101002000	HD0340101003000	HD0340101004000	HD0340101005000	HD0340101005000	HD0340101006000	HD0340101006000	HD0340101006000
ASSEMBLY PLATE GASKET	HD0010403004000	HD0010403005000	HD00104030106000	HD0010403007000	HD0010403008000	HD0010403009000	HD0010403010000	HD0010403011000	HD0010403012000	HD0010403013000	HD0010403014000
SIPHON PACKING	HD0110001XXXXXX	HD0110001XXXXXX	HD0110001XXXXXX	HD0110001XXXXXX	HD0110001XXXXXX	HD0110001XXXXXX	HD0110001XXXXXX	HD0110001XXXXXX	HD0110001XXXXXX	HD0110001XXXXXX	HD0110001XXXXXX
PACKING GLAND	RY1000201XXXXXX	RY1000201XXXXXX	RY1000201XXXXXX	RY1000201XXXXXX	RY1000201XXXXXX	RY1000201XXXXXX	RY1000201XXXXXX	RY1000201XXXXXX	RY1000201XXXXXX	RY1000201XXXXXX	RY1000201XXXXXX
LOCK NUT	RY1010201XXXXXX	RY1010201XXXXXX	RY1010201XXXXXX	RY1010201XXXXXX	RY1010201XXXXXX	RY1010201XXXXXX	RY1010201XXXXXX	RY1010201XXXXXX	RY1010201XXXXXX	RY1010201XXXXXX	RY1010201XXXXXX
ASSEMBLY PLATE	RY0880103201500	RY0880103202000	RY0880103202500	RY0880103203200	RY0880103204000	RY0880103205000	RY0880103206500	RY0880103208000	RY0880103208500	RY0880103210000	RY0880103212500
SCREWS	HD0240501001000	HD0240501001000	HD0240501004000	HD0240501007000	HD0240501007000	HD0240501011000	HD0240501011000	HD0240501012000	HD0240501017000	HD0240501017000	HD0240501052000
BOLTS	HD0240101036000	HD0240101036000	HD0240101015000	HD0240101015000	HD0240101018000	HD0240101024000	HD0240101025000	HD0240101025000	HD0240101028000	HD0240101032000	HD0240101032000

600 SERIES

For AIR AND HYDRAULIC
1/8" (DN06) - 1 1/2" (DN40)

- Self supported rotating joint
- Single and dual flow
- Radial housing connection
- Aluminium housing
- Hard chrome plated steel shaft
- Bronze bearing for slow speeds

Application Parameters

Max. Air Pressure	: 10 bar	150psi
Max. Vacuum	: 7 KPA	2"Hg
Max. Hydraulic Pressure (at 10 RPM)	: 200 bar	2900psi
Max. Hydraulic Pressure (at 250 RPM)	: 10 bar	150psi
Max. Speed	: 250 RPM	250 min^{-1}
Max. Tempereture	: 120°C	250°F

Avoid working with max. speed at max. pressure

For further information, please consult FACTORY, or your local distributor.

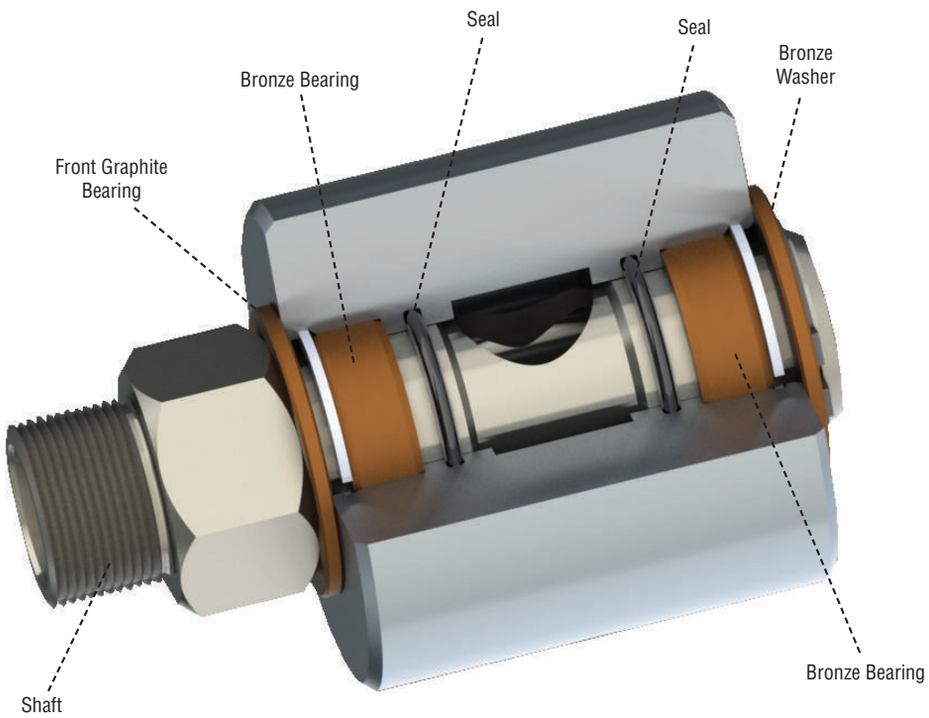

600+1 SERIES

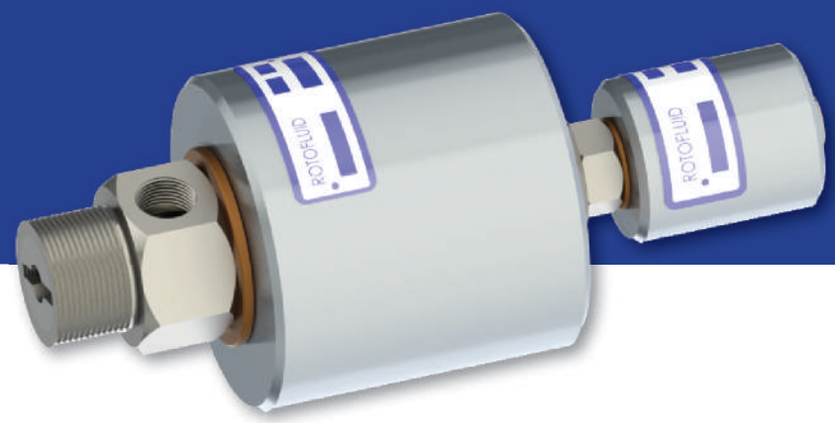

For AIR AND HYDRAULIC
1/2" (DN15) x 1/8" (DN06) /
1" (DN25) x 3/8" (DN10)

- Self supported rotating joint
- 2 – port joint
- Aluminium housing
- Hard chrome plated steel shaft
- Bronze bearing for slow speeds
- No inter passage leakage between ports

Application Parameters

Max. Air Pressure	: 10 bar	150psi
Max. Vacuum	: 7 KPA	2"Hg
Max. Hydraulic Pressure (at 10 RPM)	: 200 bar	2900psi
Max. Hydraulic Pressure (at 250 RPM)	: 10 bar	150psi
Max. Speed	: 250 RPM	250 min^{-1}
Max. Tempereture	: 120°C	250°F

Avoid working with max. speed at max. pressure

For further information, please consult FACTORY, or your local distributor.

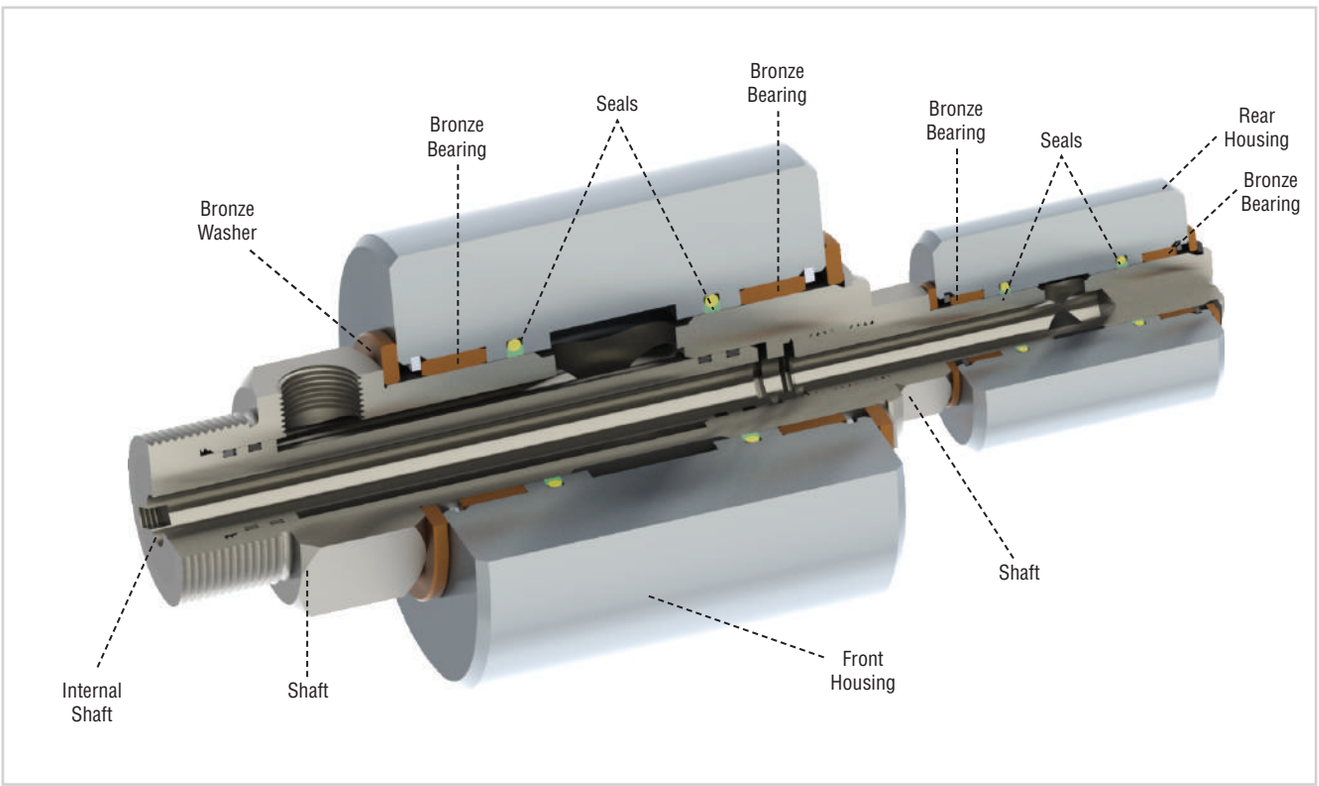

600 SERIES

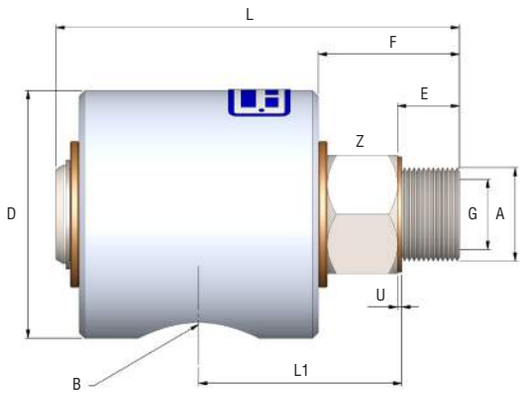

600+1 SERIES

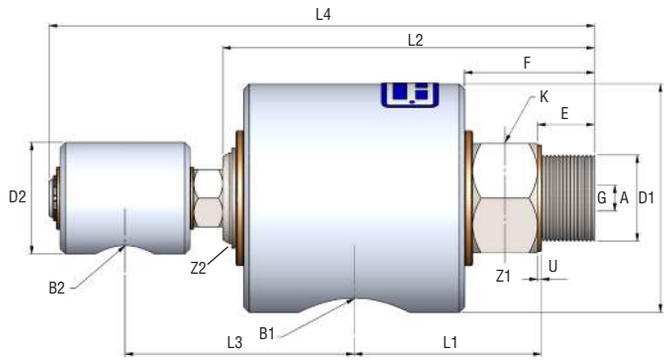

Z: Hexagon

600 SERIES

A			MODEL	B	D	E	F	G	L1	L	U	Z	WEIGHT kg (lb)
SIZE		THREAD TYPE											
DN06	1/8"	1/8" NPT RH	601-00-101R	1/8" NPT	43	10	21.5	5	38	76	1.5	18	0.3 (0.66)
		1/8" BSPP RH	601-00-301R	1/8" NPT									
		1/8" BSPP RH	601-20-301R	1/8" BSPP									
DN08	1/4"	1/4" NPT RH	602-00-102R	1/4" NPT	43	14	26.75	6	39.5	81	1.5	22	0.3 (0.66)
		1/4" BSPP RH	602-00-302R	1/4" NPT									
		1/4" BSPP RH	602-20-302R	1/4" BSPP									
DN10	3/8"	3/8" NPT RH	603-00-103R	3/8" NPT	43	16	29	8	39.5	83	1.5	22	0.3 (0.66)
		3/8" BSPP RH	603-00-303R	3/8" NPT									
		3/8" BSPP RH	603-20-303R	3/8" BSPP									
DN15	1/2"	1/2" NPT RH	605-00-105R	1/2" NPT	67	19	39	13	56.5	116.5	1.5	35	1.3 (2.86)
		1/2" BSPP RH	605-00-305R	1/2" NPT									
		1/2" BSPP RH	605-20-305R	1/2" BSPP									
DN20	3/4"	3/4" NPT RH	607-00-107R	3/4" NPT	68.5	19	39	16	56.5	116.5	2	35	1.3 (2.86)
		3/4" BSPP RH	607-00-307R	3/4" NPT									
		3/4" BSPP RH	607-20-307R	3/4" BSPP									
DN25	1"	1" NPT RH	610-00-110R	1" NPT	88	22	50	25	72.5	143	2	42	2.1 (4.62)
		1" BSPP RH	610-00-310R	1" NPT									
		1" BSPP RH	610-20-310R	1" BSPP									
DN32	1 1/4"	1 1/4"" NPT RH	612-00-112R	1 1/4" NPT	96	24	52	32	80	161	2	46	2.6 (5.72)
		1 1/4"" BSPP RH	612-00-312R	1 1/4" NPT									
		1 1/4"" BSPP RH	612-20-312R	1 1/4" BSPP									
DN40	1 1/2"	1 1/2"" NPT RH	615-00-115R	1 1/2" NPT	108	25	55	40	87	174.5	2	55	3.4 (7.48)
		1 1/2"" BSPP RH	615-00-315R	1 1/2" NPT									
		1 1/2"" BSPP RH	615-20-315R	1 1/2" BSPP									

600+1 SERIES

A			MODEL	B1	B2	K	D1	D2	E	F	G	L1	L2	L3	L4	U	Z1	Z2	WEIGHT kg (lb)
SIZE		THREAD TYPE																	
DN15	1/2"	1/2" NPT RH	605-00-105R1	1/2" NPT	1/8" NPT	1/8" NPT	67	43	19	39	6	56.5	116.5	79	182	1.5	35	18	1.6 (3.52)
		1/2" BSPP RH	605-00-305R1	1/2" NPT	1/8" NPT	1/8" NPT													
		1/2" BSPP RH	605-20-305R1	1/2" BSPP	1/8" BSPP	1/8" BSPP													
DN20	3/4"	3/4" NPT RH	607-00-107R2	3/4" NPT	1/4" NPT	1/4" NPT	68.5	43	19	39	6.4	56.5	116.5	80.5	186.5	2	35	22	1.6 (3.52)
		3/4" BSPP RH	607-00-307R2	3/4" NPT	1/4" NPT	1/4" NPT													
		3/4" BSPP RH	607-20-307R2	3/4" BSPP	1/4" BSPP	1/4" BSPP													
DN25	1"	1" NPT RH	610-00-110R3	1" NPT	3/8" NPT	3/8" NPT	88	43	22	50	10	72.5	143	88.5	210	2	42	22	2.4 (5.28)
		1" BSPP RH	610-00-310R3	1" NPT	3/8" NPT	3/8" NPT													
		1" BSPP RH	610-20-310R3	1" BSPP	3/8" BSPP	3/8" BSPP													

600 SERIES - SPARE PARTS LIST

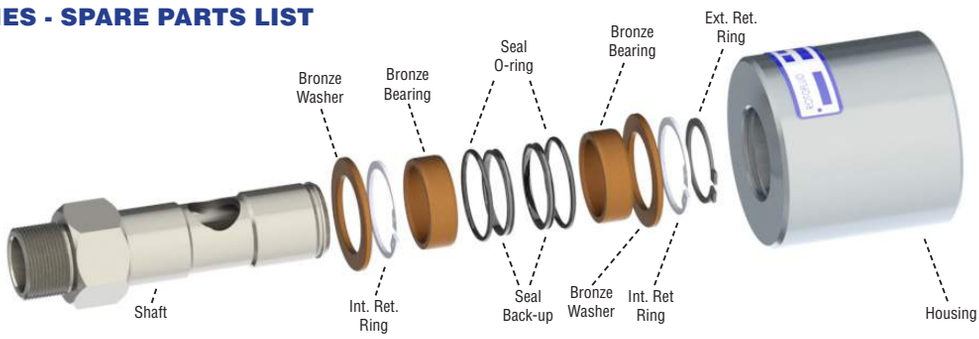

PART NAME	1/8"	1/4"	3/8"	1/2"	3/4"	1"	1 1/4"	1 1/2"
HOUSING (NPT)	RY003011101R000	RY003011102R000	RY003011103R000	RY003011105R000	RY003011107R000	RY003011110R000	RY003011112R000	RY003011115R000
HOUSING (BSPP)	RY003011301R000	RY003011302R000	RY003011303R000	RY003011305R000	RY003011307R000	RY003011310R000	RY003011312R000	RY003011315R000
SHAFT (NPT)	RY0040103101R00	RY0040103102R00	RY0040103103R00	RY0040103105R00	RY0040103107R00	RY0040103110R00	RY0040103112R00	RY0040103115R00
SHAFT (BSPP)	RY0040103301R00	RY0040103302R00	RY0040103303R00	RY0040103305R00	RY0040103307R00	RY0040103310R00	RY0040103312R00	RY0040103315R00
BRONZE BEARING	RY0090110200100	RY0090110200100	RY0090110200100	RY0090110200200	RY0090110200200	RY0090110200300	RY0090110200400	RY0090110200500
BRONZE WASHER	RY0090210200100	RY0090210200100	RY0090210200100	RY0090210200200	RY0090210200200	RY0090210200300	RY0090210200400	RY0090210200500
TEFLON SEAL	HD0060402001000	HD0060402001000	HD0060402001000	HD0060402002000	HD0060402002000	HD0060402003000	HD0060402004000	HD0060402005000
O-RING	HD0170002011000	HD0170002011000	HD0170002011000	HD0170002012000	HD0170002012000	HD0170002013000	HD0170002014000	HD0170002015000
INTERNAL RETAINING RING	HD0180301001000	HD0180301001000	HD0180301001000	HD0180301002000	HD0180301002000	HD0180301003000	HD0180301004000	HD0180301005000
EXTERNAL RETAIINING RING	HD0180101005000	HD0180101005000	HD0180101005000	HD0180101008000	HD0180101008000	HD0180101011000	HD0180101012000	HD0180101014000

600+1 SERIES - SPARE PARTS LIST

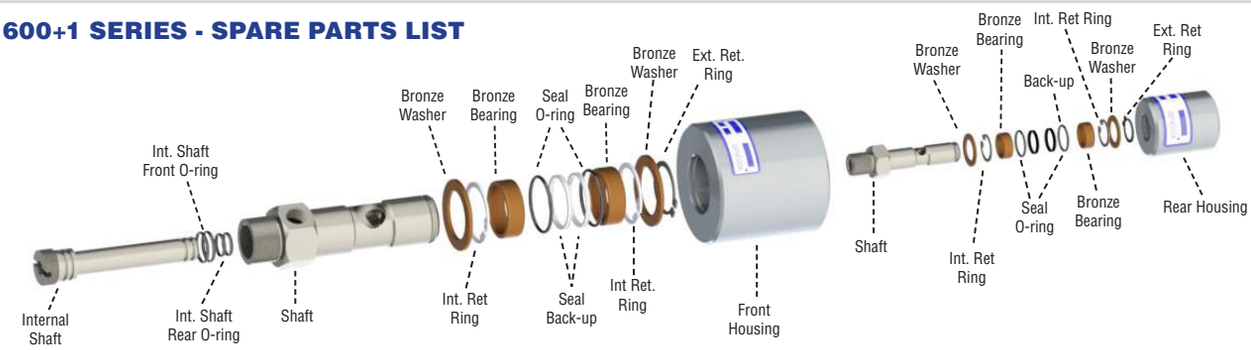

PART NAME	1/2" x 1/8"	3/4" x 1/4"	1" x 3/8"
HOUSING (NPT)	RY003011105R000	RY003011107R000	RY003011110R000
HOUSING (BSPP)	RY003011305R000	RY003011307R000	RY003011310R000
SHAFT (NPT)	RY0040103151111	RY0040103171212	RY0040103181313
SHAFT (BSPP)	RY0040103353131	RY0040103373232	RY0040103383333
INTERNAL SHAFT	RY0050102005000	RY0050102007500	RY0050102010000
INT. SHAFT FRONT O-RING	HD0170002002000	HD0170002018000	HD0170002004000
INT. SHAFT REAR O-RING	HD0170002148000	HD0170002001000	HD0170002024000
BRONZE BEARING	RY0090110200200	RY0090110200200	RY0090110200300
BRONZE WASHER	RY0090210200200	RY0090210200200	RY0090210200300
TEFLON WASHER	HD0060402002000	HD0060402002000	HD0060402003000
SEAL O-RING	HD0170002012000	HD0170002012000	HD0170002013000
INTERNAL RETAINING RING	HD0180301002000	HD0180301002000	HD0180301003000
EXTERNAL RETAINING RING	HD0180101008000	HD0180101008000	HD0180101011000
HOUSING (NPT)	RY003011101R000	RY003011102R000	RY003011103R000
HOUSING (BSPP)	RY003011301R000	RY003011302R000	RY003011303R000
SHAFT (NPT)	RY0040103101R00	RY0040103102R00	RY0040103103R00
SHAFT (BSPP)	RY0040103301R00	RY0040103302R00	RY0040103303R00
BRONZE BEARING	RY0090110200100	RY0090110200100	RY0090110200100
BRONZE WASHER	RY0090210200100	RY0090210200100	RY0090210200100
TEFLON SEAL	HD0060402001000	HD0060402001000	HD0060402001000
O-RING	HD0170002011000	HD0170002011000	HD0170002011000
INTERNAL RETAINING RING	HD0180301001000	HD0180301001000	HD0180301001000
EXTERNAL RETAIINING RING	HD0180101005000	HD0180101005000	HD0180101005000

700 SERIES

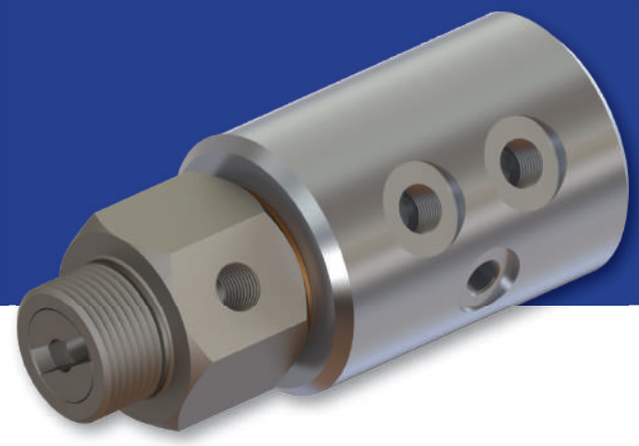

For AIR AND HYDRAULIC
2x1/4" (2xDN08) - 2x3/4" (2xDN20)

- Self supported rotating joint
- 2 - port design
- Radial housing connection
- Aluminium housing
- Hard chrome plated steel shaft
- Bronze bearing for slow speeds
- 1/8" (DN06) drain hole between ports
- 3-port design with an additional 600 series joint

Application Parameters

Max. Air Pressure	: 10 bar	150psi
Max. Vacuum	: 7 KPA	2"Hg
Max. Hydraulic Pressure (at 10 RPM)	: 200 bar	2900psi
Max. Hydraulic Pressure (at 250 RPM)	: 10 bar	150psi
Max. Speed	: 250 RPM	250 min^{-1}
Max. Temperature	: 120°C	250°F

Avoid working with max. speed at max. pressure

For further information, please consult FACTORY, or your local distributor.

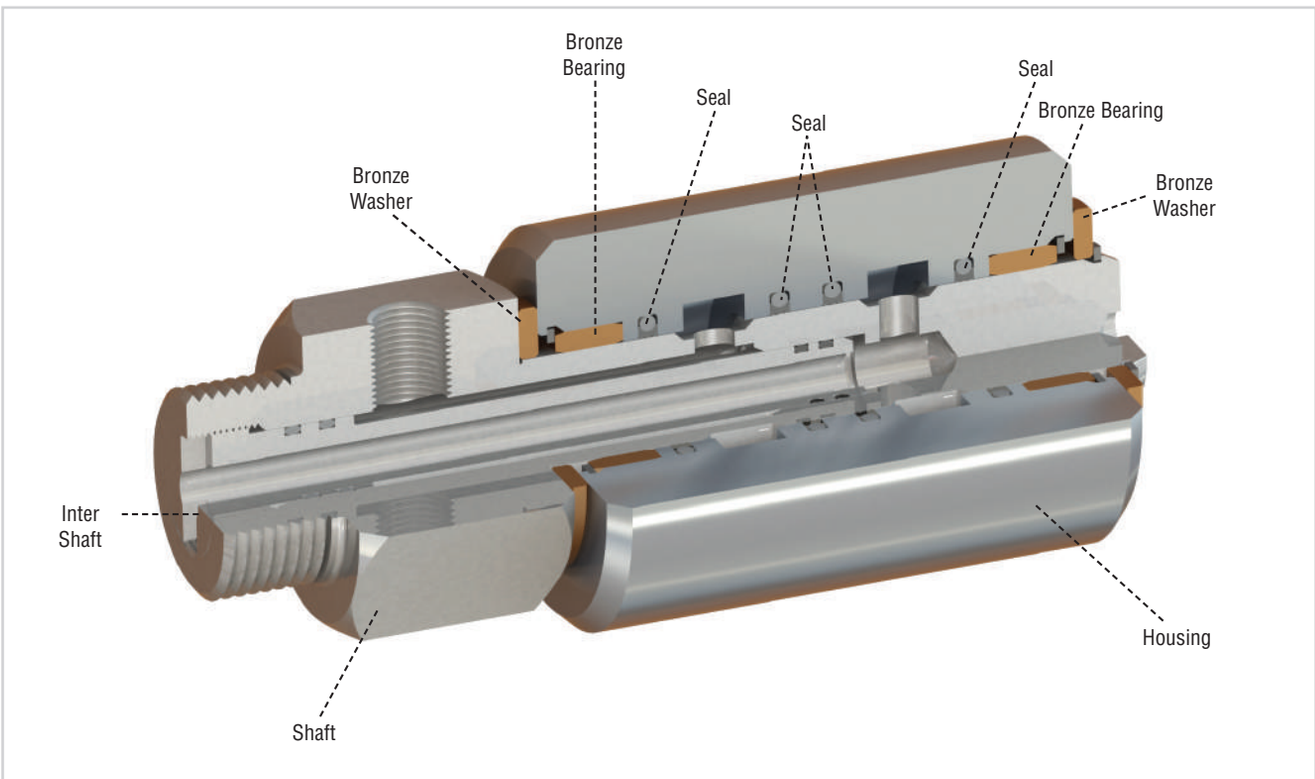

700 SERIES

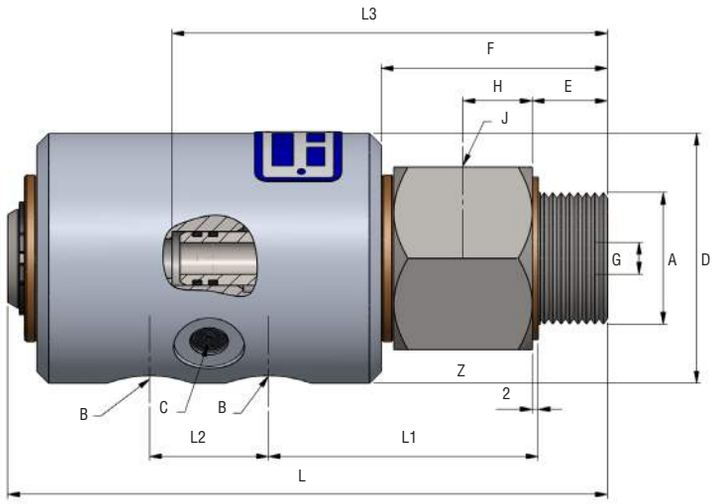

Z: Hexagon

A			MODEL	B		C (DRAIN)	J	D	E	F	G	H	L1	L2	L3	L	Z	WEIGHT kg (lbs)
SIZE		THREAD TYPE																
DN20	3/4"	3/4" BSPP RH	725-000-111	2xDN08	2x1/4" NPT	1/8" NPT	2x1/4" NPT	63	19	57	8	17.5	68.5	30	106	151.5	46	1.85 (4.07)
			725-200-131		2x1/4" BSPP	1/8" BSPP	2x1/4" BSPP											
DN25	1"	1" BSPP RH	725-000-113	2xDN08	2x1/4" NPT	1/8" NPT	2x1/4" NPT	63	19	57	8	17.5	68.5	30	110	151.5	46	1.85 (4.07)
			725-200-133		2x1/4" BSPP	1/8" BSPP	2x1/4" BSPP											
DN25	1"	1" BSPP RH	737-000-113	2xDN10	2X3/8" NPT	1/8" NPT	2X3/8" NPT	63	19	57	10	17.5	70.5	32	113	158.5	46	1.85 (4.07)
			737-200-133		2X3/8" BSPP	1/8" BSPP	2X3/8" BSPP											
DN32	1 1/4"	1 1/4" BSPP RH	750-000-115	2xDN15	2x1/2" NPT	1/8" NPT	2x1/2" NPT	73	28	66	15	17.5	78.5	43	138	194	55	2.35 (5.17)
			750-200-135		2x1/2" BSPP	1/8" BSPP	2x1/2" BSPP											
DN40	1 1/2"	1 1/2" BSPP RH	775-000-117	2xDN20	2x3/4" NPT	1/8" NPT	2x3/4" NPT	97	25	63	20	17.5	84.5	50	145	212	65	4.25 (9.35)
			775-200-137		2x3/4" BSPP	1/8" BSPP	2x3/4" BSPP											

700+1 SERIES

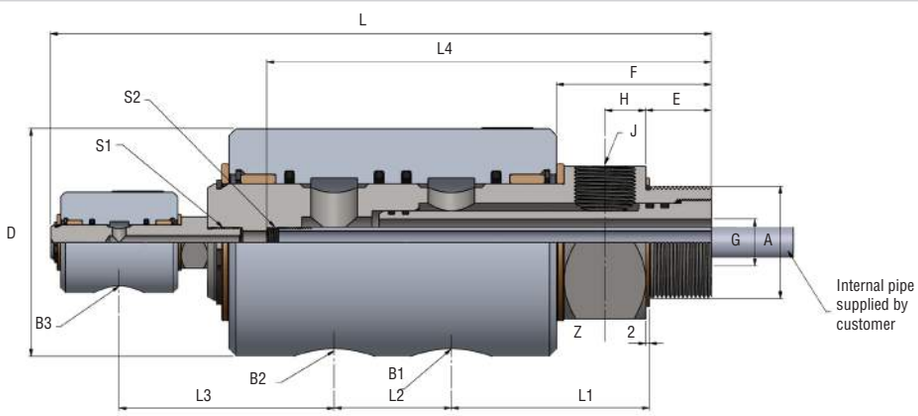

Z: Hexagon

A			MODEL	B1 x B2		B3	C (DRAIN)	J	D	E	F	G	H	L1	L2	L3	L4	L	S1	S2	Z	WEIGHT kg (lbs)
SIZE		THREAD TYPE																				
DN40	1 1/2"	1 1/2" BSPP RH	775-015-137	2xDN20	2x3/4" NPT	1/4" NPT	1/8" NPT	2x3/4" NPT	97	25	63	20	17.5	84.5	50	92	145	282	1/4" BSPP	1/4" BSPP	65	4.55 (10.01)
			775-215-137		2x3/4" BSPP	1/4" BSP	1/8" BSPP	2x3/4" BSPP														

700 SERIES SPARE PARTS

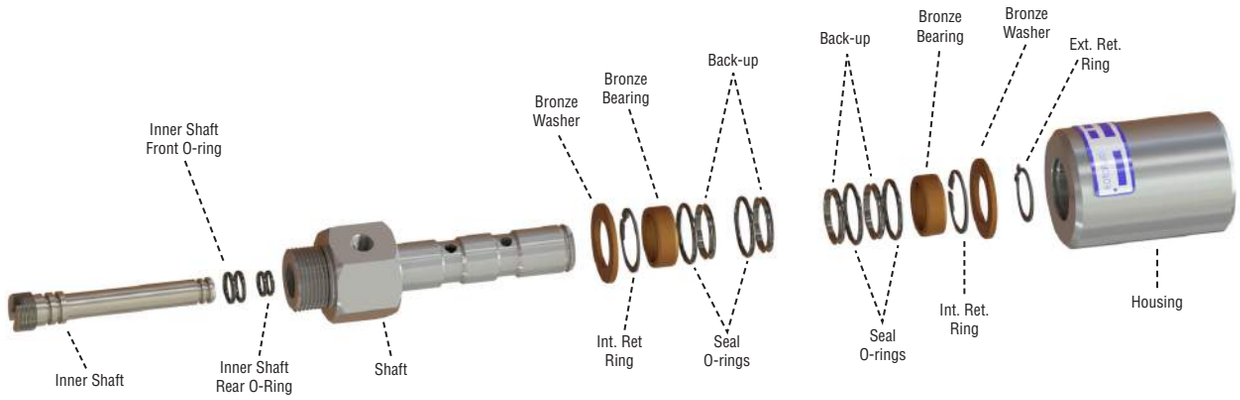

PART NAME	2x1/4" (DN20)	2x1/4" (DN25)	2x3/8" (DN25)	2x1/2" (DN32)	2x3/4" (DN40)
HOUSING (NPT)	RY00601101102R0	RY00601101102R0	RY00601102103R0	RY00601103105R0	RY00601104107R0
HOUSING (BSPP)	RY00601101302R0	RY00601101302R0	RY00601102303R0	RY00601103305R0	RY00601104307R0
SHAFT (NPT)	RY0071300111211	RY0071300111212	RY0071300121212	RY0071300131413	RY0071300141514
SHAFT (BSPP)	RY0071300313231	RY0071300313232	RY0071300323232	RY0071300333433	RY0071300343534
INNER SHAFT	RY0080102011300	RY0080102012300	RY0080102022300	RY0080102033300	RY0080102044300
INNER SHAFT FRONT O-RING	HD0170002024000	HD0170002024000	HD0170002024000	HD0170002005000	HD0170002012000
INNER SHAFT REAR O-RING	HD0170002002000	HD0170002002000	HD0170002018000	HD0170002004000	HD0170002005000
BRONZE WASHER	RY0090210200200	RY0090210200200	RY0090210200200	RY0090110200300	RY0090110200500
BRONZE BEARING	RY0090110200200	RY0090110200200	RY0090110200200	RY0090210200300	RY0090210200500
TEFLON SEAL	HD0060402002000	HD0060402002000	HD0060402002000	HD0060402003000	HD0060402005000
O-RING	HD0170002012000	HD0170002012000	HD0170002012000	HD0170002013000	HD0170002015000
INT. RETAINING RING	HD0180301002000	HD0180301002000	HD0180301002000	HD0180301003000	HD0180301005000
EXT. RETAINING RING	HD0180101008000	HD0180101008000	HD0180101008000	HD0180101011000	HD0180101014000

10 SERIES

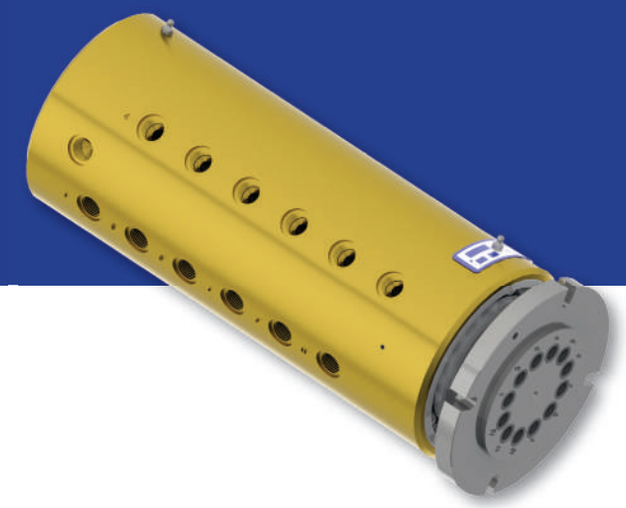

For AIR, HYDRAULIC, WATER GASES, ALL KINDS OF LIQUIDS 1/8" (DN06) - 1" (DN25)

- Self supported rotating joint
- Radial housing connections as standard
- Axial / radial shaft outlets
- Steel, stainless, brass, aluminium material alternatives
- Hard chrome plating on sealing surfaces
- Special models for special applications
- 2-12 ports as standard

Application Parameters

Max. Pressure	: 450 bar	6500psi
Max. Tempereture	: 120°C	250°F
Max. Speed	: 250 RPM	250 min^{-1}

Please consult factory for special application parameters

Avoid working with max. speed at max. pressure

For further information, please consult FACTORY, or your local distributor.

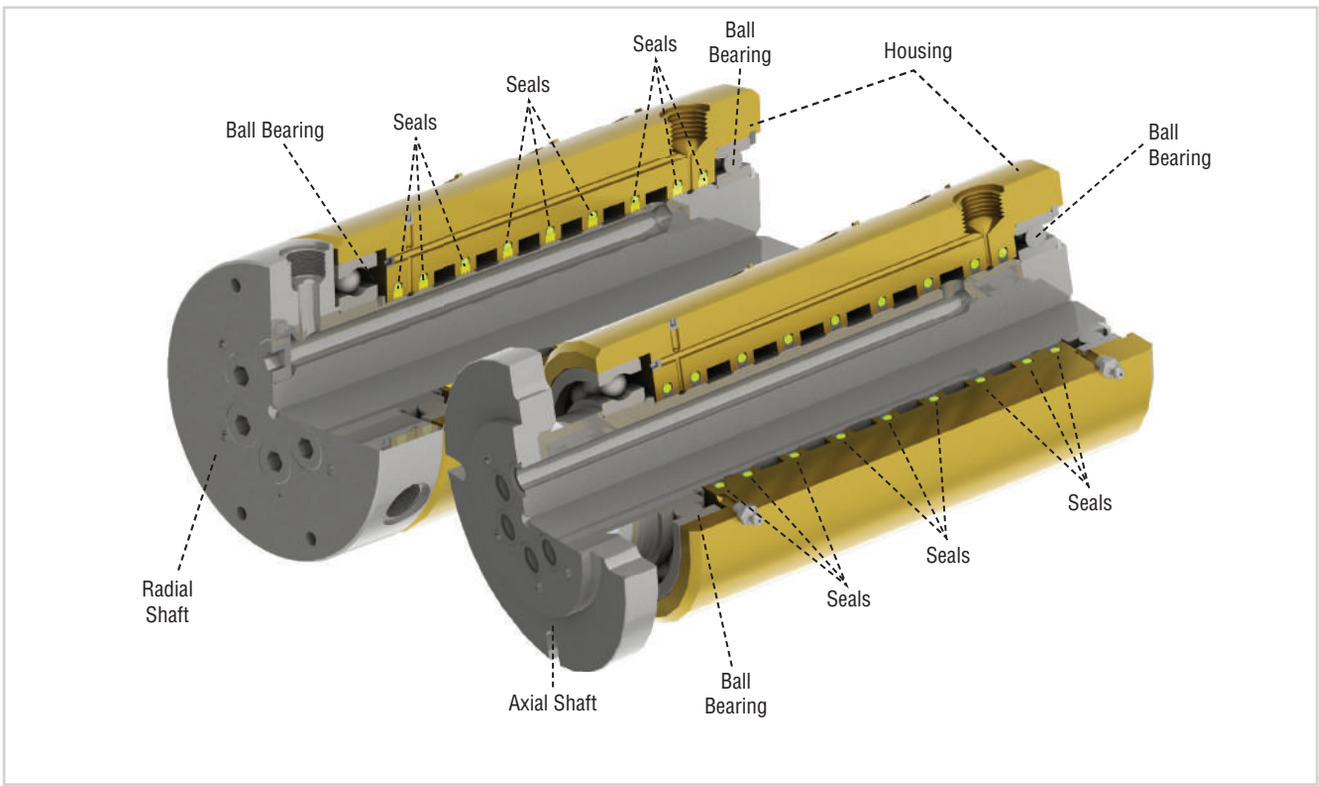

10 SERIES AXIAL

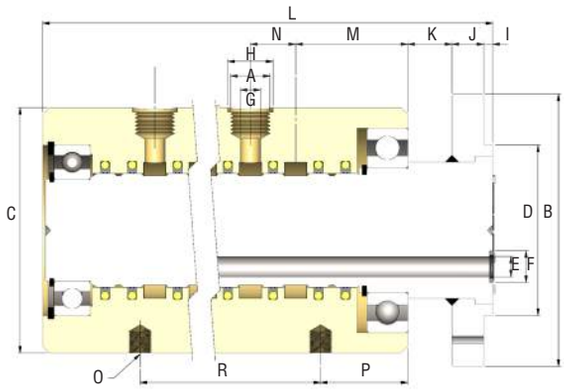

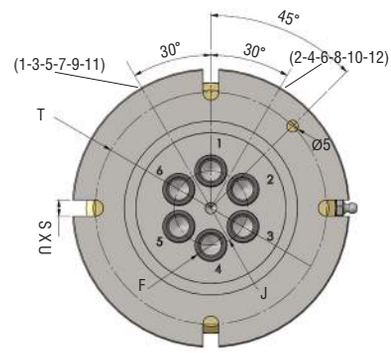

CONFIGURATIONS

2 ports | 3 ports | 4 ports | 5 ports | 6 ports | 8 ports | 12 ports

A		STOCK CODE NPT	STOCK CODE BSPP	B	C	D	E	F	G	H	I	J	K	L	M	N	O	P	R	S	T	V
2 x DN06	2 x 1/8"	0012-21-0206-1	0012-23-0206-1	95	77	50	4	8.5	4	18	4	10	15	128.5	42	15	M6	35	35	4 x Ø7	80	22
2 x DN08	2 x 1/4"	0012-21-0208-1	0012-23-0208-1	95	77	50	6	10.5	6	20	4	10	15	128.5	42	15	M8	35	35	4 x Ø7	80	22
2 x DN10	2 x 3/8"	0012-21-0210-1	0012-23-0210-1	110	88	60	10	14	10	20	4	11	14	143	47	20	M8	36	40	4 x Ø7	90	25
2 x DN15	2 x 1/2"	0012-21-0212-1	0012-23-0212-1	120	108	75	13	18	13	25	4	14	20	166.5	52	25	M10	38.5	50	4 x Ø7	100	30
2 x DN20	2 x 3/4"	0012-21-0220-1	0012-23-0220-1	150	150	95	18	24	18	37	4	14	22	190	60	30	M12	45	60	4 x Ø9	130	38
2 x DN25	2 x 1"	0012-21-0225-1	0012-23-0225-1	160	165	105	25	30	25	43	4	16	23	209.5	65.5	36	M12	50	72	4 x Ø9	140	50
3 x DN06	3 x 1/8"	0012-21-0306-1	0012-23-0306-1	95	77	50	4	8.5	4	18	4	10	15	143.5	42	15	M6	35	50	4 x Ø7	80	22
3 x DN08	3 x 1/4"	0012-21-0308-1	0012-23-0308-1	95	77	50	6	10.5	6	20	4	10	15	143.5	42	15	M8	35	50	4 x Ø7	80	22
3 x DN10	3 x 3/8"	0012-21-0310-1	0012-23-0310-1	110	88	60	10	14	10	20	4	11	14	163	47	20	M8	36	60	4 x Ø7	90	25
3 x DN15	3 x 1/2"	0012-21-0312-1	0012-23-0312-1	120	108	75	13	18	13	25	4	14	19.5	191.5	52	25	M10	38.5	75	4 x Ø7	100	30
3 x DN20	3 x 3/4"	0012-21-0320-1	0012-23-0320-1	150	150	95	18	24	18	37	4	14	22	220	60	30	M12	45	90	4 x Ø9	130	38
3 x DN25	3 x 1"	0012-21-0325-1	0012-23-0325-1	160	165	105	25	30	25	43	4	16	23	245.5	65.5	36	M12	50	108	4 x Ø9	140	50
4 x DN06	4 x 1/8"	0012-21-0406-1	0012-23-0406-1	95	77	50	4	8.5	4	18	4	10	15	158.5	42	15	M8	35	65	4 x Ø7	80	22
4 x DN08	4 x 1/4"	0012-21-0408-1	0012-23-0408-1	95	77	50	6	10.5	6	20	4	10	15	158.5	42	15	M8	35	65	4 x Ø7	80	22
4 x DN10	4 x 3/8"	0012-21-0410-1	0012-23-0410-1	110	88	60	10	14	10	20	4	11	14	183	47	20	M10	36	80	4 x Ø7	90	25
4 x DN15	4 x 1/2"	0012-21-0412-1	0012-23-0412-1	120	108	75	13	18	13	25	4	14	19.5	216.5	52	25	M10	38.5	100	4 x Ø7	100	25
4 x DN20	4 x 3/4"	0012-21-0420-1	0012-23-0420-1	150	150	95	18	24	18	37	4	14	22	250	60	30	M12	45	120	4 x Ø9	130	38
4 x DN25	4 x 1"	0012-21-0425-1	0012-23-0425-1	160	165	105	25	30	25	43	4	16	23	281.5	65.5	36	M12	50	144	4 x Ø9	140	50
5 x DN06	5 x 1/8"	0012-21-0506-1	0012-23-0506-1	95	77	50	4	8.5	4	18	4	10	15	173.5	42	15	M8	35	80	4 x Ø7	80	22
5 x DN08	5 x 1/4"	0012-21-0508-1	0012-23-0508-1	95	77	50	6	10.5	6	20	4	10	15	173.5	42	15	M8	35	80	4 x Ø7	80	22
5 x DN10	5 x 3/8"	0012-21-0510-1	0012-23-0510-1	120	108	75	9	14	9	20	4	14	19.5	216.5	49.5	20	M10	38.5	97.5	4 x Ø7	10	33
5 x DN15	5 x 1/2"	0012-21-0512-1	0012-23-0512-1	130	108	75	13	18	13	25	4	14	19.5	241.5	52	25	M10	38.5	125	4 x Ø9	110	35
5 x DN20	5 x 3/4"	0012-21-0520-1	0012-23-0520-1	155	155	100	18	24	18	37	4	14	22	280	60	30	M12	45	150	4 x Ø9	135	56
5 x DN25	5 x 1"	0012-21-0525-1	0012-23-0525-1	170	180	120	25	30	25	43	4	16	23	323.5	69.5	36	M12	54	176	4 x Ø9	150	66
6 x DN06	6 x 1/8"	0012-21-0606-1	0012-23-0606-1	95	77	50	4	8.5	4	18	4	10	15	188.5	42	15	M8	35	95	4 x Ø7	80	22
6 x DN08	6 x 1/4"	0012-21-0608-1	0012-23-0608-1	95	77	50	6	10.5	6	20	4	10	15	188.5	42	15	M8	35	95	4 x Ø7	80	22
6 x DN10	6 x 3/8"	0012-21-0610-1	0012-23-0610-1	120	108	75	9	14	9	20	4	14	19.5	236.5	49.5	20	M10	38.5	117.5	4 x Ø7	100	32
6 x DN15	6 x 1/2"	0012-21-0612-1	0012-23-0612-1	130	108	75	13	18	13	25	4	14	19.5	266.5	52	25	M10	38.5	150	4 x Ø9	110	38
6 x DN20	6 x 3/4"	0012-21-0620-1	0012-23-0620-1	155	155	100	18	24	18	37	4	14	22	310	60	30	M12	45	180	4 x Ø9	135	56
6 x DN25	6 x 1"	0012-21-0625-1	0012-23-0625-1	170	180	120	25	30	25	43	4	16	23	359.5	69.5	36	M12	54	212	4 x Ø9	150	66
8 x DN06	8 x 1/8"	0012-21-0806-1	0012-23-0806-1	95	77	50	4	8.5	4	18	4	10	15	218.5	42	15	M8	35	125	4 x Ø7	80	26
8 x DN08	8 x 1/4"	0012-21-0808-1	0012-23-0808-1	120	108	75	6	10.5	6	20	4	14	19.5	244	47.5	15	M8	38.5	125	4 x Ø7	100	32
8 x DN10	8 x 3/8"	0012-21-0810-1	0012-23-0810-1	130	108	75	9	14	9	20	4	14	19.5	276.5	49.5	20	M10	38.5	157.5	4 x Ø9	110	42
8 x DN15	8 x 1/2"	0012-21-0812-1	0012-23-0812-1	150	138	95	13	18	13	25	4	14	19.5	327	57	25	M10	43.5	200	4 x Ø9	130	54
8 x DN20	8 x 3/4"	0012-21-0820-1	0012-23-0820-1	170	180	120	18	24	18	37	4	16	20	380.5	66.5	30	M12	51.5	233.5	4 x Ø9	150	70
8 x DN25	8 x 1"	0012-21-0825-1	0012-23-0825-1	200	220	150	25	30	25	43	4	16	23	443.5	112.5	36	M12	61	277	4 x Ø9	180	87
12 x DN06	12 x 1/8"	0012-21-1206-1	0012-23-1206-1	120	108	75	4	8.5	4	18	4	14	19.5	308	47.5	15	M8	35	185	4 x Ø7	100	36
12 x DN08	12 x 1/4"	0012-21-1208-1	0012-23-1208-1	130	108	75	6	10.5	6	20	4	14	19.5	308	47.5	15	M8	38.5	185	4 x Ø9	110	45
12 x DN10	12 x 3/8"	0012-21-1210-1	0012-23-1210-1	150	138	95	9	14	9	20	4	14	19.5	367	54.5	20	M10	43.5	212.5	4 x Ø9	130	60
12 x DN15	12 x 1/2"	0012-21-1212-1	0012-23-1212-1	170	180	120	13	18	13	25	4	16	22.5	443	64	25	M10	50.5	290	4 x Ø9	150	78
12 x DN20	12 x 3/4"	0012-21-1220-1	0012-23-1220-1	210	230	160	18	24	18	37	4	16	35	528	75	30	M12	70	345	4 x Ø9	190	100
12 x DN25	12 x 1"	0012-21-1225-1	0012-31-1225-1	250	280	190	25	30	25	43	4	18	35	601.5	85.5	36	M12	76	412	4 x Ø11	230	125

10 SERIES

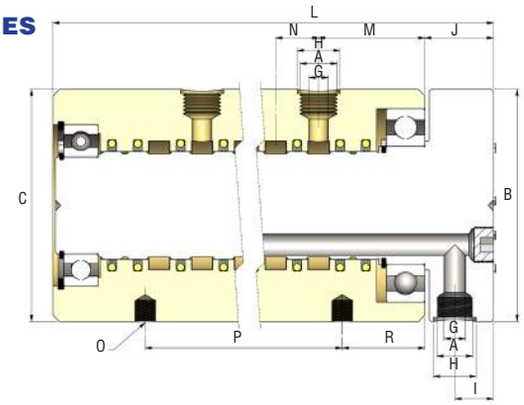

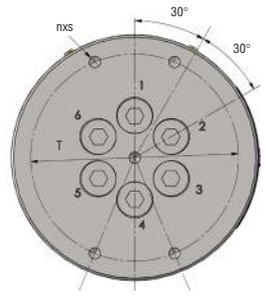

CONFIGURATIONS

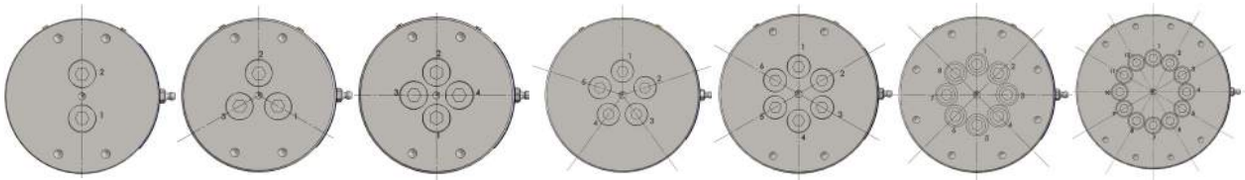

2 ports | 3 ports | 4 ports | 5 ports | 6 ports | 8 ports | 12 ports

A		STOCK CODE NPT	STOCK CODE BSPP	B	C	G	H	I	J	L	M	N	O	P	R	n x S	T
2 x DN06	2 x 1/8"	0012-21-0206-2	0012-23-0206-2	77	77	4	18	14	25.5	125	42	15	M6	35	35	4 x M6	62
2 x DN08	2 x 1/4"	0012-21-0208-2	0012-23-0208-2	77	77	6	20	14	28.5	128	42	15	M8	35	35	4 x M6	62
2 x DN10	2 x 3/8"	0012-21-0210-2	0012-23-0210-2	88	88	10	20	18	32	146	47	20	M8	36	40	4 x M6	71
2 x DN15	2 x 1/2"	0012-21-0212-2	0012-23-0212-2	108	108	13	25	22	39	168	52	25	M10	38.5	50	4 x M6	91
2 x DN20	2 x 3/4"	0012-21-0220-2	0012-23-0220-2	150	150	18	37	26.5	49	199	60	30	M12	45	60	4 x M8	125
2 x DN25	2 x 1"	0012-21-0225-2	0012-23-0225-2	165	165	25	43	35	62	228.5	65.5	36	M12	50	72	4 x M8	140
3 x DN06	3 x 1/8"	0012-21-0306-2	0012-23-0306-2	77	77	4	18	14	26.5	141	42	15	M6	35	50	4 x M6	62
3 x DN08	3 x 1/4"	0012-21-0308-2	0012-23-0308-2	77	77	6	20	14	28.5	143	42	15	M8	35	50	4 x M6	62
3 x DN10	3 x 3/8"	0012-21-0310-2	0012-23-0310-2	88	88	10	20	18	32	166	47	20	M8	36	60	4 x M6	71
3 x DN15	3 x 1/2"	0012-21-0312-2	0012-23-0312-2	108	108	13	25	22	39	193	52	25	M10	38.5	75	4 x M6	90
3 x DN20	3 x 3/4"	0012-21-0320-2	0012-23-0320-2	150	150	18	37	26.5	49	229	60	30	M12	45	90	4 x M8	125
3 x DN25	3 x 1"	0012-21-0325-2	0012-23-0325-2	165	165	25	43	35	62	264.5	65.5	36	M12	50	108	4 x M8	140
4 x DN06	4 x 1/8"	0012-21-0406-2	0012-23-0406-2	77	77	4	18	14	25.5	155	42	15	M8	35	65	4 x M6	62
4 x DN08	4 x 1/4"	0012-21-0408-2	0012-23-0408-2	77	77	6	20	14	28.5	158	42	15	M8	35	65	4 x M6	62
4 x DN10	4 x 3/8"	0012-21-0410-2	0012-23-0410-2	88	88	10	20	18	32	186	47	20	M10	36	80	4 x M6	71
4 x DN15	4 x 1/2"	0012-21-0412-2	0012-23-0412-2	108	108	13	25	22	39	218	52	25	M10	38.5	100	4 x M6	90
4 x DN20	4 x 3/4"	0012-21-0420-2	0012-23-0420-2	150	150	18	37	26.5	49	259	60	30	M12	45	120	4 x M8	125
4 x DN25	4 x 1"	0012-21-0425-2	0012-23-0425-2	165	165	25	43	35	62	300.5	65.5	36	M12	50	144	4 x M8	140
5 x DN06	5 x 1/8"	0012-21-0506-2	0012-23-0506-2	77	77	4	18	14	25.5	170	42	15	M8	35	80	4 x M6	62
5 x DN08	5 x 1/4"	0012-21-0508-2	0012-23-0508-2	77	77	6	20	14	28.5	173	42	15	M8	35	80	4 x M6	62
5 x DN10	5 x 3/8"	0012-21-0510-2	0012-23-0510-2	108	108	9	20	18	32	211	49.5	20	M10	38.5	97.5	4 x M6	90
5 x DN15	5 x 1/2"	0012-21-0512-2	0012-23-0512-2	108	108	13	25	22	39	243	52	25	M10	38.5	125	4 x M6	108
5 x DN20	5 x 3/4"	0012-21-0520-2	0012-23-0520-2	155	155	18	37	26.5	49	289	60	30	M12	45	150	5 x M8	130
5 x DN25	5 x 1"	0012-21-0525-2	0012-23-0525-2	180	180	25	43	35	62	342.5	69.5	36	M12	54	176	5 x M8	155
6 x DN06	6 x 1/8"	0012-21-0606-2	0012-23-0606-2	77	77	4	18	14	25.5	186	42	15	M8	35	95	4 x M6	62
6 x DN08	6 x 1/4"	0012-21-0608-2	0012-23-0608-2	77	77	6	20	14	28.5	188	42	15	M8	35	95	4 x M6	62
6 x DN10	6 x 3/8"	0012-21-0610-2	0012-23-0610-2	108	108	9	20	18	32	231	49.5	20	M10	38.5	117.5	4 x M6	91
6 x DN15	6 x 1/2"	0012-21-0612-2	0012-23-0612-2	108	108	13	25	22	39	268	52	25	M10	38.5	150	4 x M6	91
6 x DN20	6 x 3/4"	0012-21-0620-2	0012-23-0620-2	150	155	18	37	26.5	49	319	60	30	M12	45	180	4 x M8	125
6 x DN25	6 x 1"	0012-21-0625-2	0012-23-0625-2	180	180	25	43	35	62	378.5	69.5	36	M12	54	212	4 x M8	155
8 x DN06	8 x 1/8"	0012-21-0806-2	0012-23-0806-2	77	77	4	18	14	25.5	215	42	15	M8	35	125	8 x M6	62
8 x DN08	8 x 1/4"	0012-21-0808-2	0012-23-0808-2	108	108	6	20	14	28.5	235	47.5	15	M8	38.5	125	8 x M6	91
8 x DN10	8 x 3/8"	0012-21-0810-2	0012-23-0810-2	108	108	9	20	18	32	271	49.5	20	M10	38.5	157.5	8 x M6	91
8 x DN15	8 x 1/2"	0012-21-0812-2	0012-23-0812-2	138	138	13	25	22	39	328.5	57	25	M10	43.5	200	8 x M6	121
8 x DN20	8 x 3/4"	0012-21-0820-2	0012-23-0820-2	180	180	18	37	26.5	49	389.5	66.5	30	M12	51.5	233.5	8 x M8	155
8 x DN25	8 x 1"	0012-21-0825-2	0012-23-0825-2	220	220	25	43	35	62	461.5	112.5	36	M12	61	277	8 x M8	195
12 x DN06	12 x 1/8"	0012-21-1206-2	0012-23-1206-2	108	108	4	18	14	25.5	296	47.5	15	M8	35	185	12 x M6	91
12 x DN08	12 x 1/4"	0012-21-1208-2	0012-23-1208-2	108	108	6	20	14	28.5	299	47.5	15	M8	38.5	185	12 x M6	91
12 x DN10	12 x 3/8"	0012-21-1210-2	0012-23-1210-2	138	138	9	20	18	32	361.5	54.5	20	M10	43.5	212.5	12 x M6	121
12 x DN15	12 x 1/2"	0012-21-1212-2	0012-23-1212-2	180	180	13	25	22	39	439.5	64	25	M10	50.5	290	12 x M6	155
12 x DN20	12 x 3/4"	0012-21-1220-2	0012-23-1220-2	230	230	18	37	26.5	49	522.5	75	30	M12	70	345	12 x M8	205
12 x DN25	12 x 1"	0012-21-1225-2	0012-23-1225-2	280	280	25	43	35	62	620.5	85.5	36	M12	76	412	12 x M8	255

10 SERIES SPARE PARTS

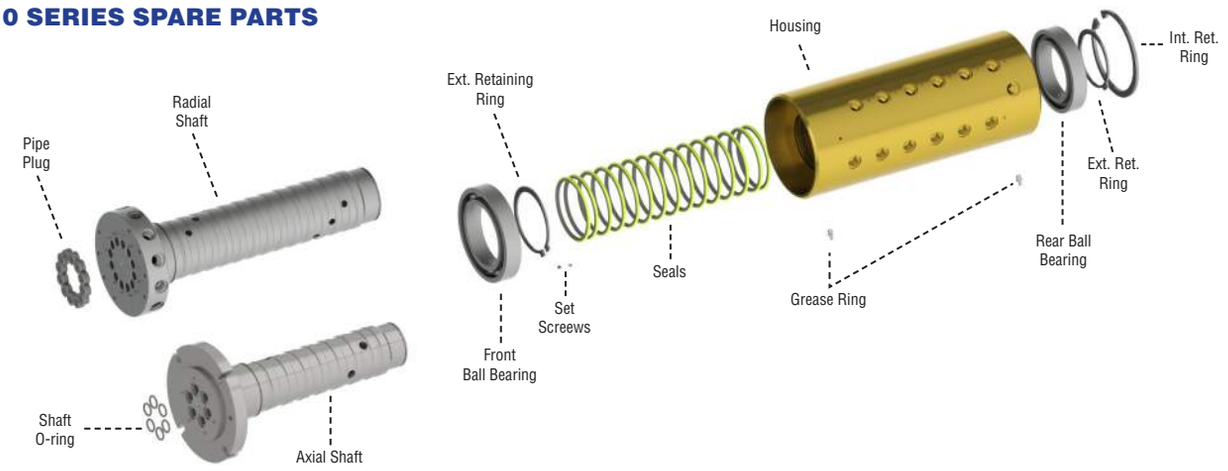

PORT # & SIZE	AL	SHAFT - AXIAL	FLANGE O-RING	SHAFT - RADIAL	PLUGS	FRONT BALL BEARING	EXT. RETAIN-ING RING	O-RING	TEFLON BACK-UP	REAR BALL BEARING	INT. RETAIN-ING RING	EXT. RETAIN-ING RING	SET SCREW	GREASE RING
2 x 1/8”														
3 x 1/8”														
4 x 1/8”														
5 x 1/8”														
6 x 1/8”														
8 x 1/8”														
10 x 1/8”														
12 x 1/8”														
2 x 1/4”														
3 x 1/4”														
4 x 1/4”														
5 x 1/4”														
6 x 1/4”														
8 x 1/4”														
10 x 1/4”														
12 x 1/4”														
2 x 3/8”														
3 x 3/8”														
4 x 3/8”														
5 x 3/8”														
6 x 3/8”														
8 x 3/8”														
10 x 3/8”														
12 x 3/8”														
2 x 1/2”														
3 x 1/2”														
4 x 1/2”														
5 x 1/2”														
6 x 1/2”														
8 x 1/2”														
10 x 1/2”														
12 x 1/2”														
2 x 3/4”														
3 x 3/4”														
4 x 3/4”														
5 x 3/4”														
6 x 3/4”														
8 x 3/4”														
10 x 3/4”														
12 x 3/4”														
2 x 1”														
3 x 1”														
4 x 1”														
5 x 1”														
6 x 1”														
8 x 1”														
10 x 1”														
12 x 1”														

CONSULT FACTORY FOR SPARE PARTS

20 SERIES

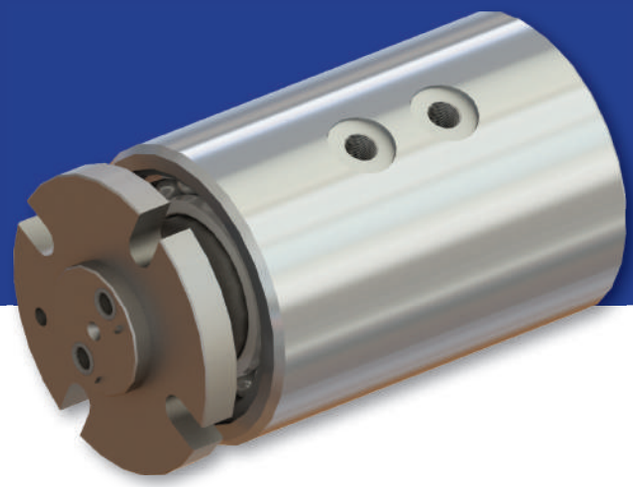

For AIR AND HYDRAULIC
1/8" (DN06) – 3/4" (DN20)

- Self supported rotating joint
- Multi channel design
- Radial housing connections
- Hard chrome plating on sealing surfaces
- High speed & low pressure joint

Application Parameters

Max. Pressure	: 12 bar	170psi
Max. Tempereture	: 120°C	250°F
Max. Speed	: 3000 min^{-1}	3000 RPM

Please consult factory for special application parameters

Avoid working with max. speed at max. pressure

For further information, please consult FACTORY, or your local representative.

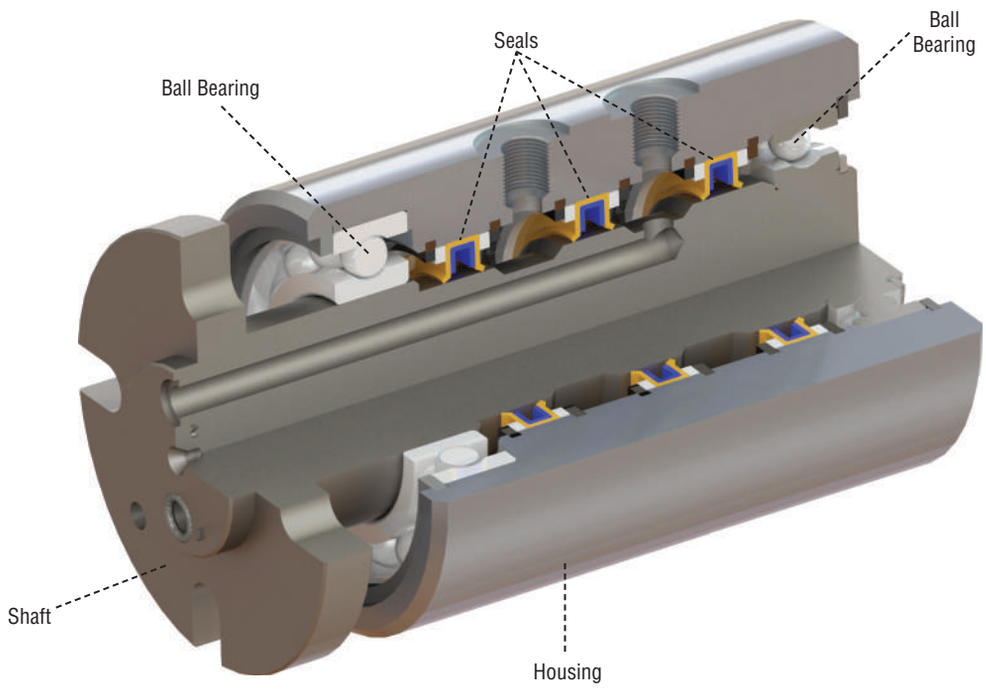

20 SERIES

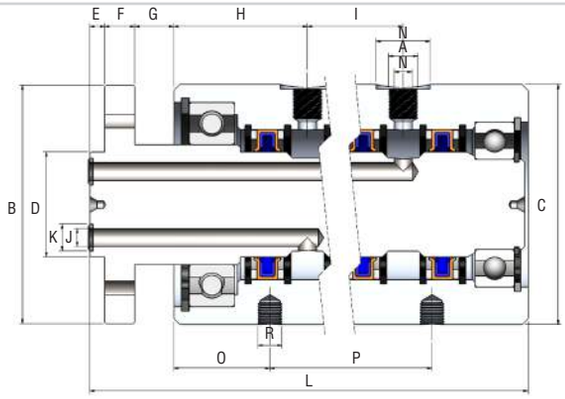

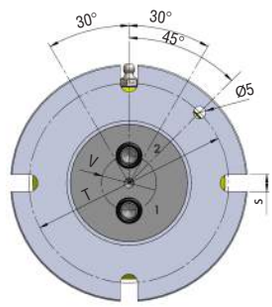

CONFIGURATIONS

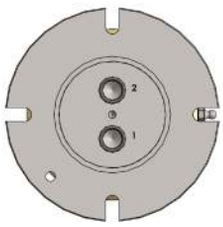

2 ports

3 ports

4 ports

A		STOCK CODE		B	C	D	E	F	G	H	I	J	K	L	M	N	O	P	R	S	T	V
		NPT	BSPP																			
2 x DN06	2 x 1/8”	22-11-0206-1	22-13-0206-1	80	80	35	5	10	15	44.5	.26.4	6	9	149.5	6	18	32	48.5	2xM8	4 x Ø9	60	22
2 x DN08	2 x 1/4”	22-11-0208-1	22-13-0208-1	100	90	40	5	12	20	53.3	31	8	12	170	8	22	32	69	2xM10	4 x Ø11	72	24
2 x DN10	2 x 3/8”	22-11-0210-1	22-13-0210-1	100	90	40	5	12	20	54	33	10	13	175	10	25	32	74	2xM10	4 x Ø11	72	24
2 x DN15	2 x 1/2”	22-11-0215-1	22-13-0215-1	115	115	55	5	14	20	56	36.85	12	18	185.2	12	32	38	74	2xM12	4 x Ø11	86	32
2 x DN20	2 x 3/4”	22-11-0220-1	22-13-0220-1	135	135	70	5	15	25	65	45.3	18	26	216.75	18	34	40	92	2xM12	4 x Ø14	108	38
3 x DN06	3 x 1/8”	22-11-0306-1	22-13-0306-1	80	80	35	5	10	15	47.5	26.4	6	9	174	6	18	32	82	2xM8	4 x Ø9	60	22
3 x DN08	3 x 1/4”	22-11-0308-1	22-13-0308-1	100	90	40	5	12	20	53.3	31	8	12	201	8	22	32	100	2xM10	4 x Ø11	72	24
3 x DN10	3 x 3/8”	22-11-0310-1	22-13-0310-1	100	90	40	5	12	20	54	33	10	13	208	10	25	32	107	2xM10	4 x Ø11	72	24
3 x DN15	3 x 1/2”	22-11-0315-1	22-13-0315-1	115	115	55	5	14	20	56	36.85	12	18	222	12	32	38	107	2xM12	4 x Ø11	86	32
3 x DN20	3 x 3/4”	22-11-0320-1	22-13-0320-1	135	135	70	5	15	25	65	45.3	18	26	262.3	18	34	40	137.3	2xM12	4 x Ø14	108	38
4 x DN06	4 x 1/8”	22-11-0406-1	22-13-0406-1	80	80	35	5	10	15	47.5	.26.4	6	9	202.5	6	18	32	108.5	2xM8	4 x Ø9	60	22
4 x DN08	4 x 1/4”	22-11-0408-1	22-13-0408-1	100	90	40	5	12	20	53.3	31	8	12	232	8	22	32	131	2xM10	4 x Ø11	72	24
4 x DN10	4 x 3/8”	22-11-0410-1	22-13-0410-1	100	90	40	5	12	20	54	33	10	13	241	10	25	32	140	2xM10	4 x Ø11	72	24
4 x DN15	4 x 1/2”	22-11-0415-1	22-13-0415-1	115	115	55	5	14	20	56	36.85	12	18	259	12	32	42	140	2xM12	4 x Ø11	86	32
4 x DN20	4 x 3/4”	22-11-0420-1	22-13-0420-1	135	135	70	5	15	25	65	45.3	18	26	307.65	18	34	50	182.6	2xM12	4 x Ø14	108	38

20 SERIES SPARE PARTS

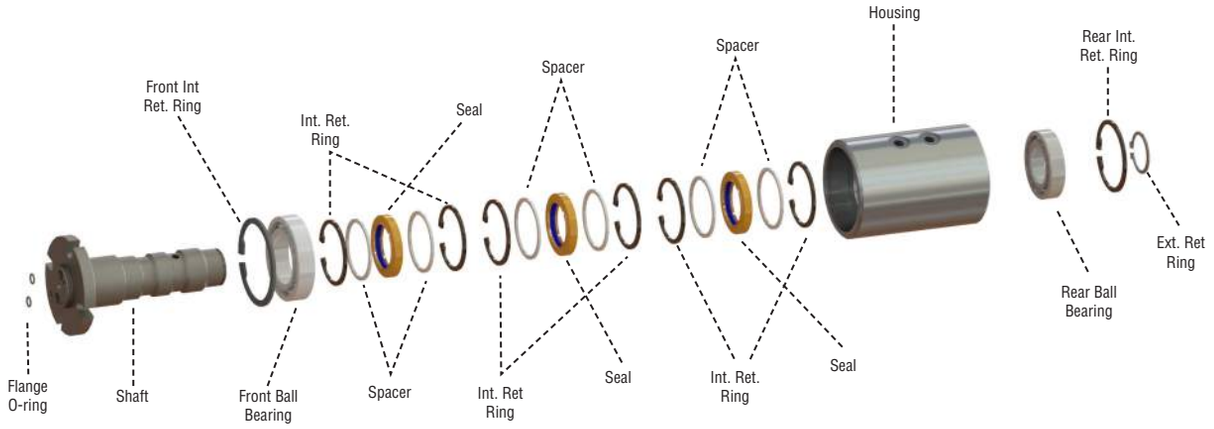

PART NAME	2 x 1/8"	3 x 1/8"	4 x 1/8"	2 x 1/4"	3 x 1/4"	4 x 1/4"	2 x 3/8"	3 x 3/8"	4 x 3/8"
HOUSING (NPT)	RY0752102101R00	RY0752103101R00	RY0752104101R00	RY0752102102R00	RY0752103102R00	RY0752104102R00	RY0752102103R00	RY0752103103R00	RY0752104103R00
HOUSING (BSPP)	RY0752102301R00	RY0752103301R00	RY0752104301R00	RY0752102302R00	RY0752103302R00	RY0752104302R00	RY0752102303R00	RY0752103303R00	RY0752104303R00
SHAFT	RY0761202000600	RY0761203000600	RY0761204000600	RY0761202000800	RY0761203000800	RY0761204000800	RY0761202001000	RY0761203001000	RY0761204001000
FLANGE O-RING	HD0170002148000	HD0170002148000	HD0170002148000	HD0170002191000	HD0170002191000	HD0170002191000	HD0170002192000	HD0170002192000	HD0170002192000
FRONT INT. RET. RING	HD0180201020000	HD0180201020000	HD0180201020000	HD0180201022000	HD0180201022000	HD0180201022000	HD0180201022000	HD0180201022000	HD0180201022000
FRONT BALL BEARING	HD0160103009000	HD0160103009000	HD0160103009000	HD0160103010000	HD0160103010000	HD0160103010000	HD0160103010000	HD0160103010000	HD0160103010000
INT. RET. RING	HD0180201015000	HD0180201015000	HD0180201015000	HD0180201015000	HD0180201015000	HD0180201015000	HD0180201015000	HD0180201015000	HD0180201015000
SPACER	HD0190104004000	HD0190104004000	HD0190104004000	HD0190104005000	HD0190104005000	HD0190104005000	HD0190104005000	HD0190104005000	HD0190104005000
SEAL	HD0130101001000	HD0130101001000	HD0130101001000	HD0130101002000	HD0130101002000	HD0130101002000	HD0130101002000	HD0130101002000	HD0130101002000
REAR BALL BEARING	HD0160103007000	HD0160103007000	HD0160103007000	HD0160103008000	HD0160103008000	HD0160103008000	HD0160103008000	HD0160103008000	HD0160103008000
REAR INT. RET. RING	HD0180201013000	HD0180201013000	HD0180201013000	HD0180201018000	HD0180201018000	HD0180201018000	HD0180201018000	HD0180201018000	HD0180201018000
EXT. RET. RING	HD0180101010000	HD0180101010000	HD0180101010000	HD0180101011000	HD0180101011000	HD0180101011000	HD0180101011000	HD0180101011000	HD0180101011000

PART NAME	2 x 1/2"	3 x 1/2"	4 x 1/2"	2 x 3/4	3 x 3/4"	4 x 3/4"
HOUSING (NPT)	RY0752102105R00	RY0752103105R00	RY0752104105R00	RY0752102107R00	RY0752103107R00	RY0752104107R00
HOUSING (BSPP)	RY0752102305R00	RY0752103305R00	RY0752104305R00	RY0752102307R00	RY0752103307R00	RY0752104307R00
SHAFT	RY0761202001500	RY0761203001500	RY0761204001500	RY0761202002000	RY0761203002000	RY0761204002000
FLANGE O-RING	HD0170002193000	HD0170002193000	HD0170002193000	HD0170002194000	HD0170002194000	HD0170002194000
INT. RET. RING	HD0180201026000	HD0180201026000	HD0180201026000	HD0180201030000	HD0180201030000	HD0180201030000
FRONT BALL BEARING	HD0160103013000	HD0160103013000	HD0160103013000	HD0160103016000	HD0160103016000	HD0160103016000
INT. RET. RING	HD0180201019000	HD0180201019000	HD0180201019000	HD0180201025000	HD0180201025000	HD0180201025000
SPACER	HD0190104006000	HD0190104006000	HD0190104006000	HD0190104007000	HD0190104007000	HD0190104007000
SEAL	HD0130101003000	HD0130101003000	HD0130101003000	HD0130101004000	HD0130101004000	HD0130101004000
REAR BALL BEARING	HD0160103010000	HD0160103010000	HD0160103010000	HD0160103014000	HD0160103014000	HD0160103014000
REAR INT. RET. RING	HD0180201022000	HD0180201022000	HD0180201022000	HD0180201028000	HD0180201028000	HD0180201028000
EXT. RET. RING	HD0180101013000	HD0180101013000	HD0180101013000	HD0180101016000	HD0180101016000	HD0180101016000

300A SERIES

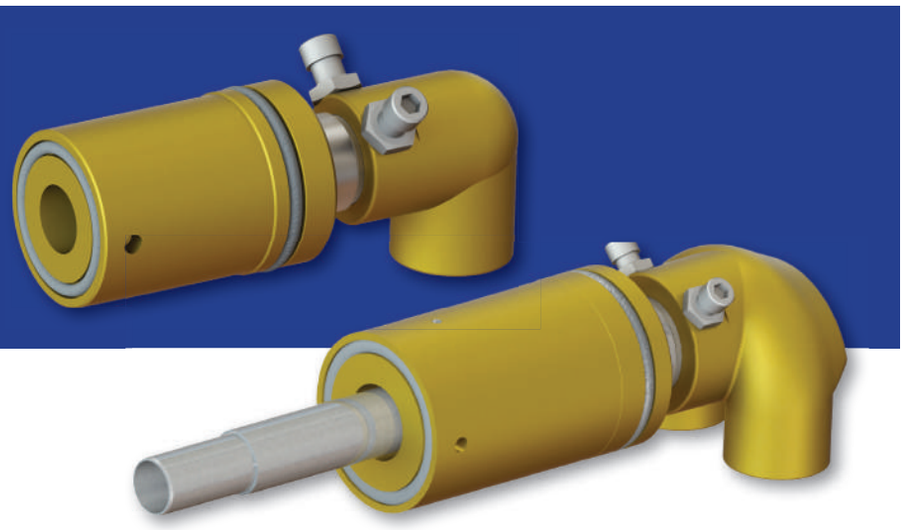

For WATER at Continuous Casting Machines 1/2" (DN15) – 1 1/2" (DN40)

- Single and dual flow design
- In the shaft mounted design
- Brass housing and elbow
- Stainless steel shaft and internal pipe
- Assembled with customers counter flange
- Full flow design
- Complete in stainless steel as option

Application Parameters

Max. Water Pressure	: 10 bar	150psi
Max. Speed	: 100 RPM	100 min^{-1}
Max. Temperature	: 120°C	250°F

Avoid working with max. speed at max. pressure

For further information, please consult FACTORY or your local distibutor

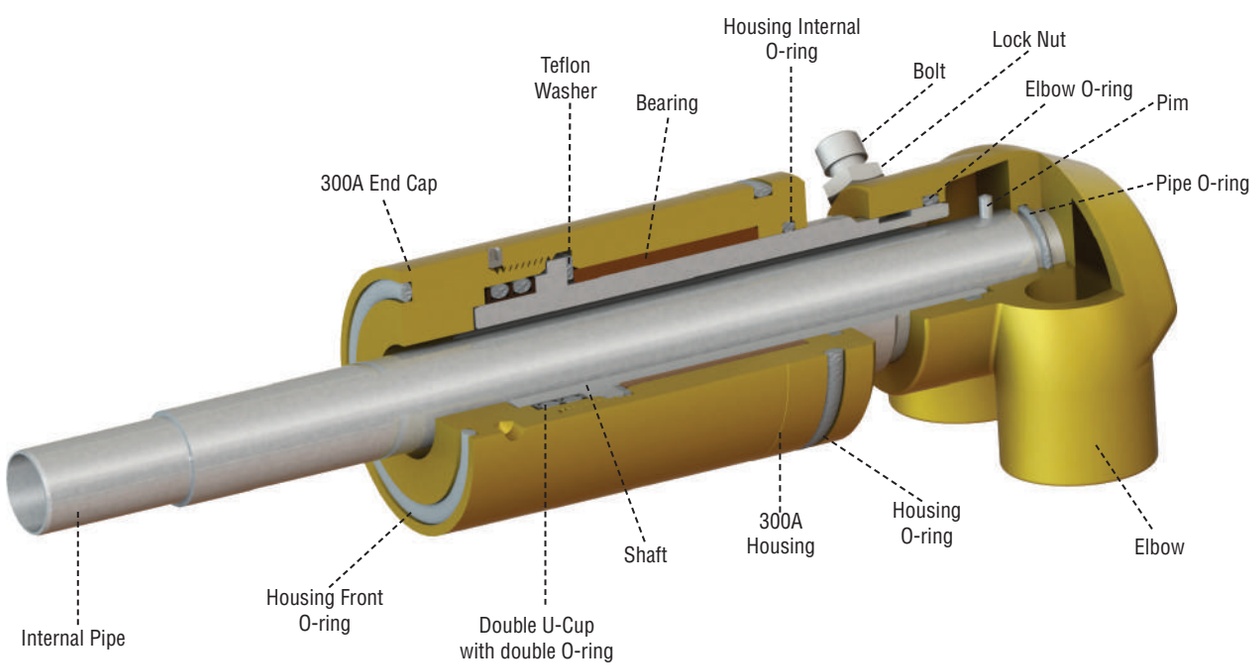

300A SERIES
SINGLE FLOW

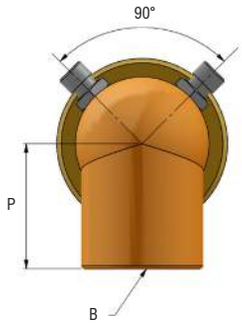

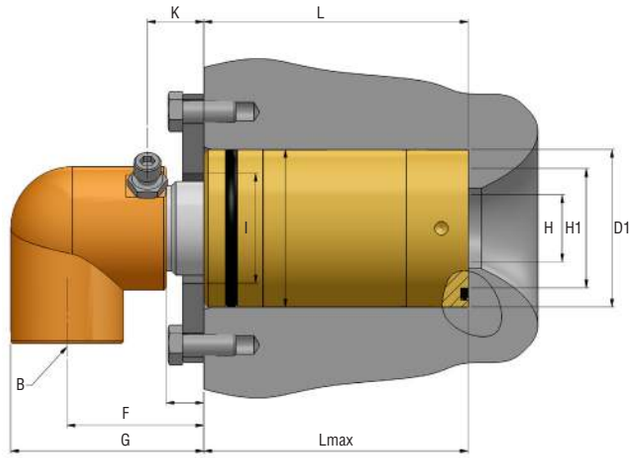

300A SERIES
DUAL FLOW

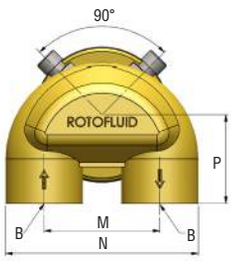

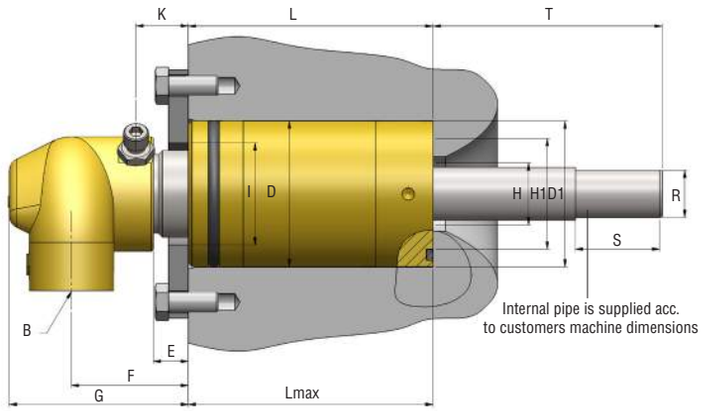

B		THREAD TYPE	MODEL	D	D1	E	F	G	H	H1	I	K	L	Lmax	P	WEIGHT
DN15	1/2"	BSPP	324-1200-000	40	40.35 40.1	14	47.5	63	13.5	25	24	20	54	53.75 53.5	31.5	2 kg (4.09 lb)
		NPT	314-1200-000	1.58	1.587 1.578	0.55	1.87	2.48	0.53	0.98	0.95	0.79	2.13	2.115 2.105	1.24	
DN20	3/4"	BSPP	325-1300-000	46	46.22 46.1	14	47.5	63	17.5	32	30	20	68	67.95 67.70	31.5	2.2 kg (4.5 lb)
		NPT	315-1300-000	1.81	1.818 1.814	0.55	1.87	2.48	0.68	1.26	1.18	0.79	2.68	2.674 2.664	1.24	
DN25	1"	BSPP	326-1400-000	58.7	58.85 58.73	14	51	72	25	44.5	41	21	98.6	98.6 98.35	43	2.8 kg (5.72 lb)
		NPT	316-1400-000	2.31	2.316 2.311	0.55	2	2.84	0.98	1.61	1.61	0.83	3.88	3.880 3.870	1.69	

B		THREAD TYPE	MODEL	D	D1	E	F	G	H	H1	I	K	L	Lmax	M	N	P	R	S	T	WEIGHT
DN15	1/2"	BSPP	344-1300-000	46	46.22 46.1	14	47.5	63	17.5	32	30	20	68	67.95 67.70	44	73	35	13.00 12.95	35	*	2.4 kg (4.9 lb)
		NPT	334-1300-000	1.81	1.818 1.814	0.55	1.87	2.48	0.68	1.26	1.18	0.79	2.68	2.674 2.664	1.73	2.87	1.38	0.511 0.509	1.37	*	
DN20	3/4"	BSPP	345-1400-000	58.7	58.85 58.73	14	51	72	25	41.5	41	21	98.6	98.6 98.35	49	83	39	19.00 18.94	35	*	3 kg (6.13 lb)
		NPT	335-1400-000	2.31	2.316 2.311	0.55	2	2.84	0.98	1.61	1.61	0.83	3.88	3.880 3.870	2	3.35	1.54	0.747 0.745	1.37	*	

*** Specity when ordering**

300B SERIES

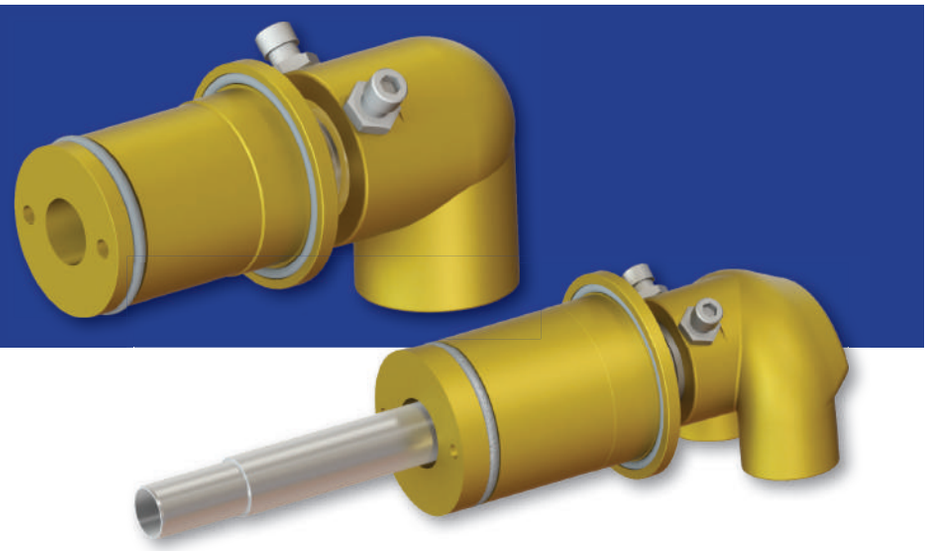

For WATER at Continuous Casting Machines
1/2 ” (DN15) – 1 1/2” (DN40)

- Single and dual flow
- In the shaft mounted design
- Brass housing and elbow
- Stainless steel shaft and internal pipe
- Assembled with customers counter flange
- Full flow design
- Complete in stainless steel as option

Application Parameters

Max. Water Pressure	: 10 bar	150psi
Max. Speed	: 100 RPM	100 min^{-1}
Max. Temperature	: 120°C	250°F

Avoid working with max. speed at max. pressure

For further information, please consult FACTORY or your local distibutor

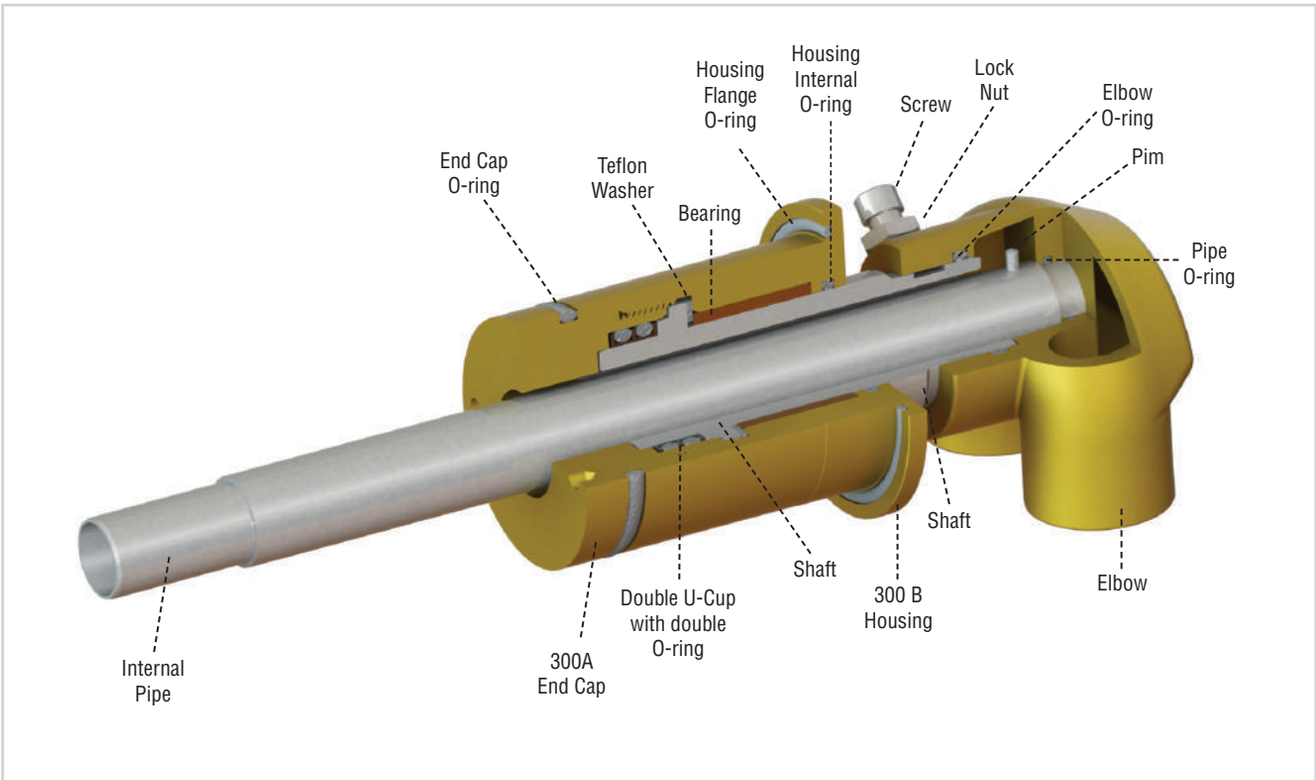

300B SERIES SINGLE FLOW

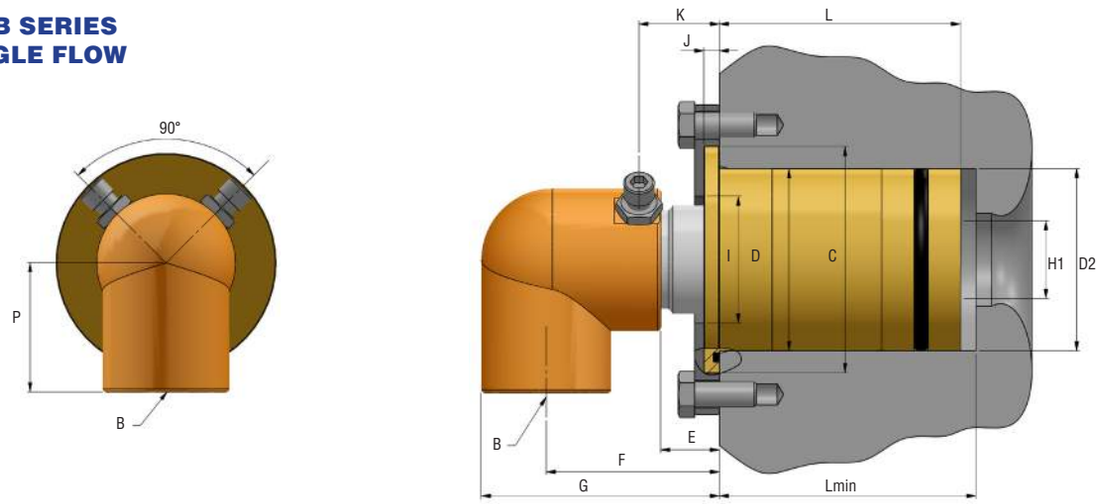

300B SERIES DUAL FLOW

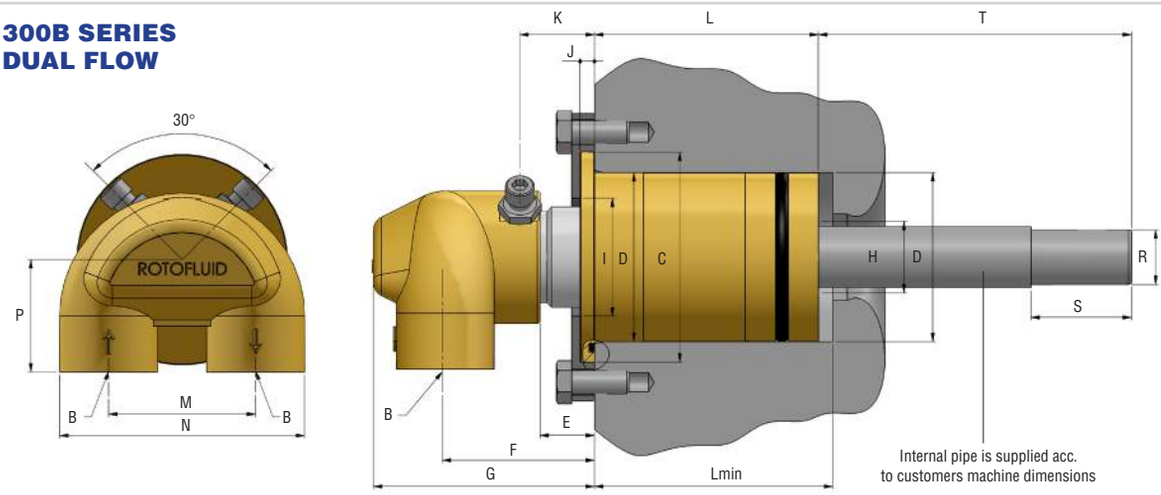

B		THREAD TYPE	MODEL	C	D	D1	E	F	G	H	I	J	K	L	Lmin	P	WEIGHT
DN15	1/2"	BSPP	324-2200-000	52	40	40.35 40.1	19	52.5	68	13.5	24	5	25	49	52	31.5	2 kg (4.09 lb)
		NPT	314-2200-000	2.05	1.58	1.587 1.578	0.75	2.07	2.68	0.53	0.95	0.2	0.98	1.93	2.05	1.24	
DN20	3/4"	BSPP	325-2300-000	59	46	46.22 46.1	19	52.5	68	17.5	30	5	25	59	62	31.5	2.2 kg (4.5 lb)
		NPT	315-2300-000	2.32	1.81	1.818 1.814	0.75	2.07	2.68	0.68	1.18	0.2	0.98	2.32	2.44	1.24	
DN25	1"	BSPP	326-2400-000	73	58.7	58.85 58.73	19	56	77	25	41	5	26	78	83	43	2.8 kg (5.72 lb)
		NPT	316-2400-000	2.87	2.31	2.316 2.311	075	2.2	3.03	0.98	1.61	0.2	1.02	307	3.27	1.69	

B		THREAD TYPE	MODEL	C	D	D1	E	F	G	H	I	J	K	L	Lmin	M	N	P	R	S	T	WEIGHT
DN15	1/2"	BSPP	344-2300-000	59	46	46.22 46.1	19	52.5	68	17.5	30	5	25	59	62	44	73	35	13.00 12.95	35	*	2.4 kg (4.9 lb)
		NPT	334-2300-000	2.32	1.81	1.818 1.814	0.75	2.07	2.68	0.68	1.18	0.2	0.98	2.32	2.44	1.73	2.87	1.38	0.511 0.509	1.37	*	
DN20	3/4"	BSPP	345-2400-000	73	58.7	58.85 58.73	19	56	77	25	41	5	26	78	83	49	83	39	19.00 18.94	35	*	3 kg (6.13 lb)
		NPT	335-2400-000	2.87	2.31	2.316 2.311	075	2.2	3.03	0.98	1.61	0.2	1.02	307	3.27	2	3.35	1.54	0.747 0.745	1.37	*	
DN25	1"	BSPP	346-2500-000	86	70.7	71.12 71.00	19	68	99	40	56	5	26	87	94	63.5	106	43	28.7 28.6	35	*	3.75 kg (7.66 lb)
		NPT	336-2500-000	3.38	2.78	2.799 2.794	0.75	2.68	3.9	1.58	2.2	0.2	1.02	3.43	3.7	2.5	4.17	1.69	1.129 1.125	1.37	*	

*** Specity when ordering**

300C SERIES

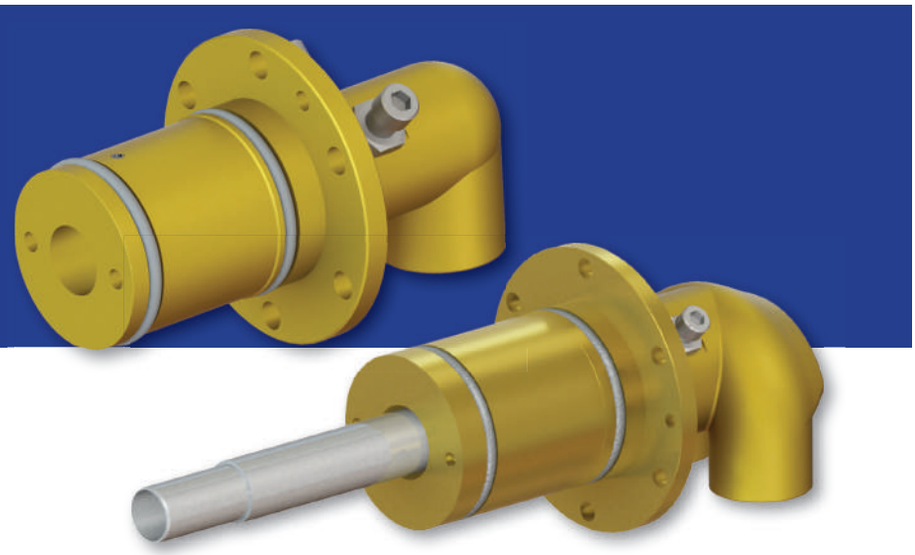

For WATER at Continuous Casting Machines
1/2 ” (DN15) – 1 1/2” (DN40)

- Single and dual flow
- In the shaft mounted design
- Brass housing and elbow
- Stainless steel shaft and internal pipe
- Assembled with the housing flange directly
- Full flow design
- Complete in stainless steel as option

Application Parameters

Max. Water Pressure	: 10 bar	150psi
Max. Speed	: 100 RPM	100 min^{-1}
Max. Tempereture	: 120°C	250°F

Avoid working with max. speed at max. pressure

For further information, please consult FACTORY or your local distibutor

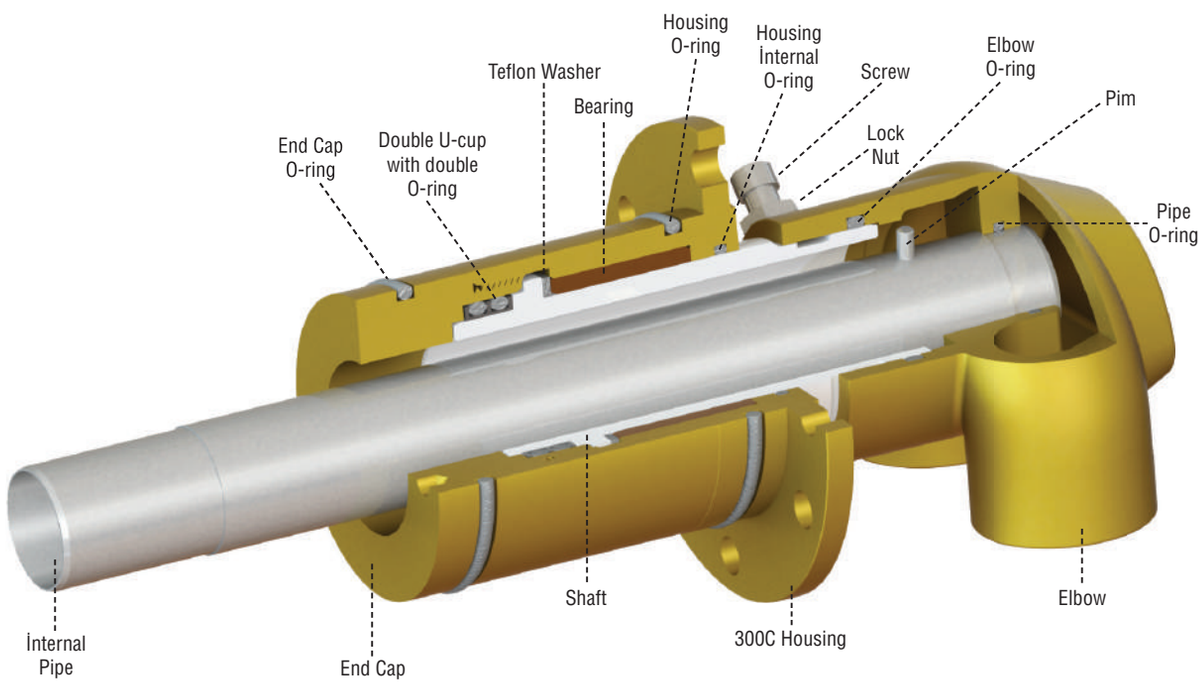

300C SERIES SINGLE FLOW

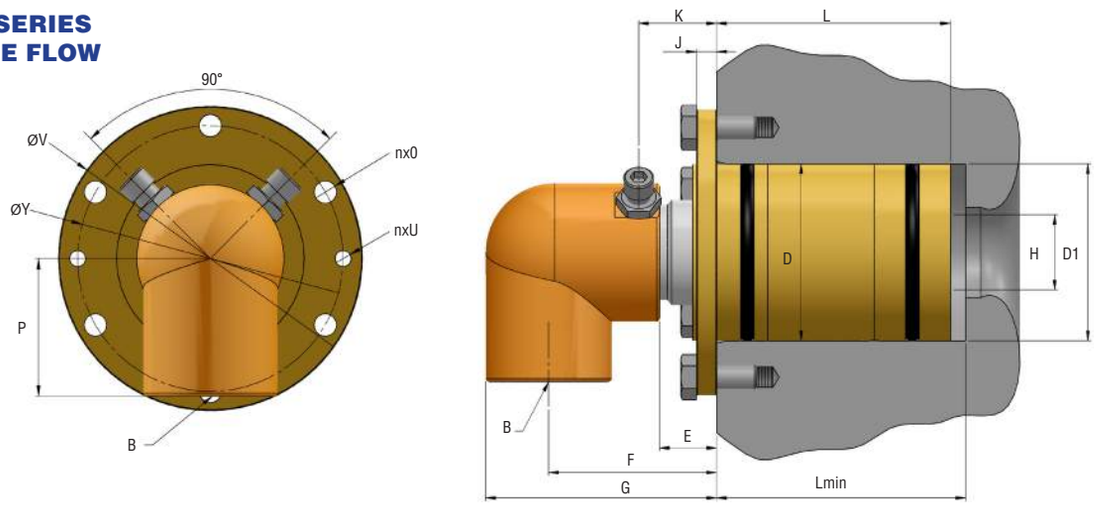

300C SERIES DUAL FLOW

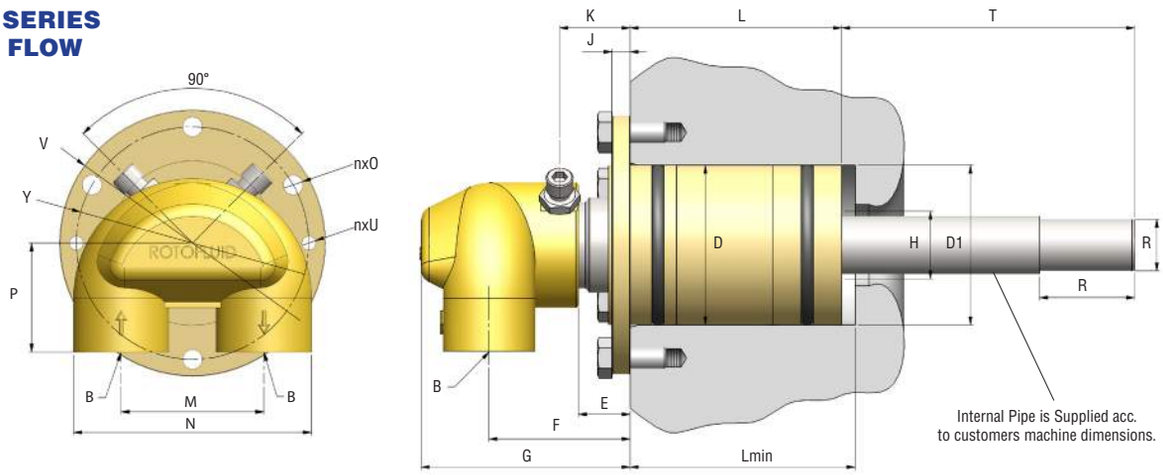

B		THREAD TYPE	MODEL	D	D1	E	F	G	H	J	K	L	Lmin	P	V	Y	n x O	n x U	WEIGHT
DN15	1/2"	NPT	314-3200-000	40	40.35 40.1	19	52	68	13.5	5	25	49	52	31.5	62	53	6 x Ø5.5	2 x M6	2 kg (4.09 lb)
		BSPP	324-3200-000	1.58	1.587 1.578	0.75	2.07	2.68	0.53	0.2	0.98	1.93	2.05	1.24	2.44	2.08	6 x Ø0.216	2 x 1/4" UNC	
DN20	3/4"	NPT	315-3300-000	46	46.22 46.1	19	52.5	68	17.5	8	25	59	62	31.5	77	65	6 x Ø7	2 x M6	2.2 kg (4.5 lb)
		BSPP	325-3300-000	1.81	1.818 1.814	0.75	2.07	2.68	0.68	0.31	0.98	2.32	2.44	1.24	3.03	2.56	6 x Ø0.275	2 x 1/4" UNC	
DN25	1"	NPT	316-3400-000	58.7	58.85 58.73	19	56	77	25	8	26	78	83	43	95	83	6 x Ø7	2 x M6	2.8 kg (5.72 lb)
		BSPP	326-3400-000	2.31	2.316 2.311	075	2.2	3.03	0.98	0.31	1.02	307	3.27	1.69	3.74	3.27	6 x Ø0.275	2 x 1/4" UNC	

B		THREAD TYPE	MODEL	D	D1	E	F	G	H	J	K	L	Lmin	M	N	P	R	S	T	V	Y	n x O	n x U	WEIGHT
DN15	1/2"	NPT	334-3300-000	46	46.22 46.1	19	52.5	68	17.5	5	25	59	62	44	73	35	13.00 12.95	35	*	77	65	6 x Ø7	2 x M6	2.4 kg (4.9 lb)
		BSPP	344-3300-000	1.81	1.818 1.814	0.75	2.07	2.68	0.68	0.2	0.98	2.32	2.44	1.73	2.87	1.38	0.511 0.509	1.37	*	3.03	2.56	6 x Ø0.275	2 x 1/4" UNC	
DN20	3/4"	NPT	335-3400-000	58.7	58.85 58.73	19	56	77	25	5	26	78	83	51	85	39	19.00 18.94	35	*	95	83	6 x Ø7	2 x M6	3 kg (6.13 lb)
		BSPP	345-3400-000	2.31	2.316 2.311	0.75	2.2	3.03	0.98	0.2	1.02	307	3.27	2	3.35	1.54	0.747 0.745	1.37	*	3.74	3.27	6 x Ø0.275	2 x 1/4" UNC	
DN25	1"	NPT	336-3500-000	70.7	71.12 71.00	19	68	99	40	5	26	87	94	63.5	106	43	28.7 28.6	35	*	110	92	6 x Ø7	2 x M6	3.75 kg (7.66 lb)
		BSPP	346-3500-000	2.78	2.799 2.794	0.75	2.68	3.9	1.58	0.2	1.02	3.43	3.7	2.5	4.17	1.69	1.129 1.125	1.37	*	4.33	3.62	6 x Ø0.275	2 x 1/4" UNC	

*** Specity when ordering**

300A SERIES SPARE PARTS

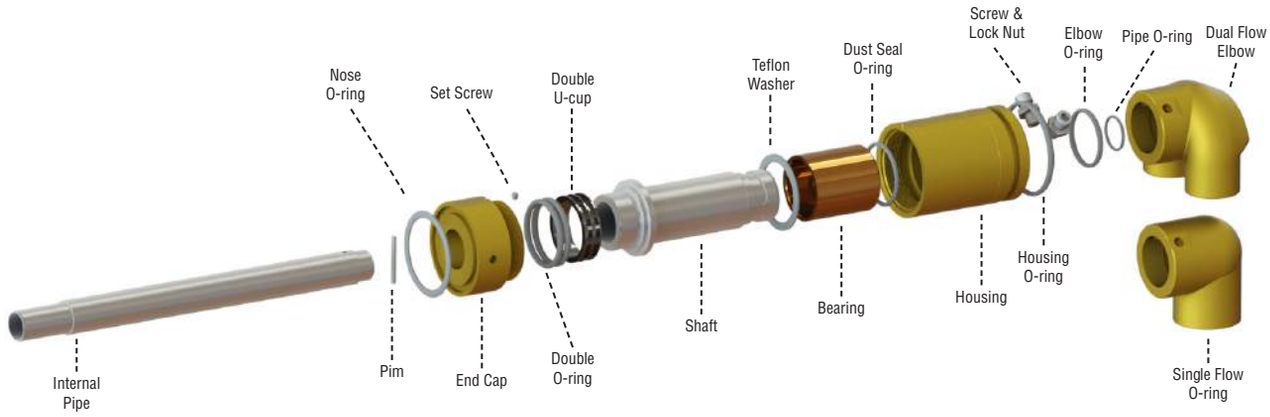

SINGLE FLOW			
DEFINITION	1/2"	3/4"	1"
300A HOUSING	RY0241101002000	RY0241101003000	RY0241101004000
300A END CAP	RY0251201002000	RY0251201003000	RY0251201004000
SHAFT	RY0260101002000	RY0260101003000	RY0260101004001
SINGLE FLOW ELBOW (NPT)	RY0271111204000	RY0271111305000	RY0271111406000
SINGLE FLOW ELBOW (BSPP)	RY0271113204000	RY0271113305000	RY0271113406000
BEARING	HD0100101007000	HD0100101008000	HD0100101009000
TEFLON WASHER	HD0190106003000	HD0190106008000	HD0190106002000
DUST SEAL O-RING	HD0170001036000	HD0170001040000	HD0170001026000
DOUBLE U-CUP	HD0060302001000	HD0060302002000	HD0060302003000
U-CUP O-RING	HD0170001037000	HD0170001040000	HD0170001041000
ELBOW O-RING	HD0170001009000	HD0170001039000	HD0170001042000
HOUSING O-RING	HD0170001007000	HD0170001041000	HD0170001029000
NOSE O-RING	HD0170001038000	HD0170001042000	HD0170001014000
BOLT	HD0240201007000	HD0240201011000	HD0240201011000
LOCK NUT	HD0280403001000	HD0280403002000	HD0280403002000
CAP SCREW	HD0290003021000	HD0290003021000	HD0290003021000

DUAL FLOW			
DEFINITION	1/2"	3/4"	1"
300A HOUSING	RY0241101003000	RY0241101004000	RY0241101005000
300A END CAP	RY0251201003000	RY0251201004000	RY0251201005000
SHAFT	RY0260101003000	RY0260101004001	RY0260101005001
DUAL FLOW ELBOWZ (NPT)	RY0271211304000	RY0271211405000	RY0271211506000
DUAL FLOW ELBOW (BSPP)	RY0271213304000	RY0271213405000	RY0271213506000
BEARING	HD0100101008000	HD0100101009000	HD0100101010000
TEFLON WASHER	HD0190106008000	HD0190106002000	HD0190106009000
DUST SEAL O-RING	HD0170001040000	HD0170001026000	HD0170001044000
DOUBLE U-CUP	HD0060302002000	HD0060302003000	HD0060302004000
U-CUP O-RING	HD0170001040000	HD0170001041000	HD0170001043000
ELBOW O-RING	HD0170001039000	HD0170001042000	HD0170001043000
HOUSING O-RING	HD0170001041000	HD0170001029000	HD0170001045000
NOSE O-RING	HD0170001042000	HD0170001014000	HD0170001029000
PIPE O-RING	HD0170001003000	HD0170001036000	HD0170001012000
PIPE PIM	HD0210201008000	HD0210201009000	HD0210201014000
BOLT	HD0240201011000	HD0240201011000	HD0240201011000
LOCK NUT	HD0280403002000	HD0280403002000	HD0280403002000
CAP SCREW	HD0290003021000	HD0290003021000	HD0290003021000

300B SERIES SPARE PARTS

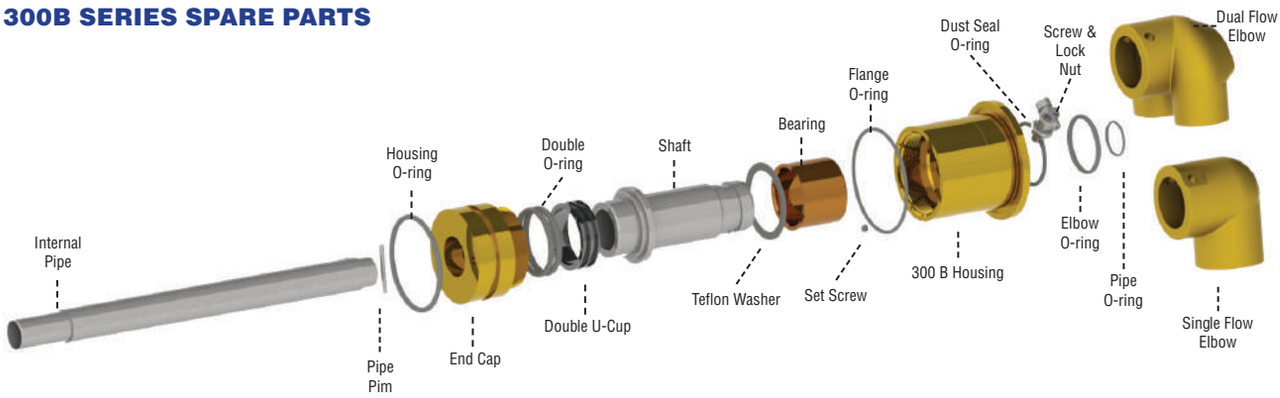

SINGLE FLOW			
DEFINITION	1/2"	3/4"	1"
300B HOUSING	RY0241201002000	RY0241201003000	RY0241201004000
300B END CAP	RY0251101002000	RY0251101003000	RY0251101004000
SHAFT	RY0260101002000	RY0260101003000	RY0260101004000
SINGLE FLOW ELBOW (NPT)	RY0271111204000	RY0271111305000	RY0271111406000
SINGLE FLOW ELBOW (BSPP)	RY0271113204000	RY0271113305000	RY0271113406000
BEARING	HD0100101007000	HD0100101008000	HD0100101009000
TEFLON WASHER	HD0190106003000	HD0190106008000	HD0190106002000
DUST SEAL O-RING	HD0170001036000	HD0170001040000	HD0170001026000
DOUBLE U-CUP	HD0060302001000	HD0060302002000	HD0060302003000
U-CUP O-RING	HD0170001037000	HD0170001040000	HD0170001041000
HOUSING O-RING	HD0170001007000	HD0170001041000	HD0170001029000
FLANGE O-RING	HD0170001027000	HD0170001046000	HD0170001047000
ELBOW O-RING	HD0170001009000	HD0170001039000	HD0170001042000
BOLT	HD0240201007000	HD0240201011000	HD0240201011000
LOCK NUT	HD0280403001000	HD0280403002000	HD0280403002000

DUAL FLOW			
DEFINITION	1/2"	3/4"	1"
300B HOUSING	RY0241201003000	RY0241201004000	RY0241201005000
300B END CAP	RY0251101003000	RY0251101004000	RY0251101005000
SHAFT	RY0260101003000	RY0260101004000	RY0260101005000
DUAL FLOW ELBOW (NPT)	RY0271211304000	RY0271211405000	RY0271211506000
DUAL FLOW ELBOW (BSPP)	RY0271213304000	RY0271213405000	RY0271213506000
BEARING	HD0100101008000	HD0100101009000	HD0100101010000
TEFLON WASHER	HD0190106008000	HD0190106002000	HD0190106009000
DUST SEAL O-RING	HD0170001040000	HD0170001026000	HD0170001044000
DOUBLE U-CUP	HD0060302002000	HD0060302003000	HD0060302004000
U-CUP O-RING	HD0170001040000	HD0170001041000	HD0170001043000
HOUSING O-RING	HD0170001041000	HD0170001029000	HD0170001045000
FLANGE O-RING	HD0170001046000	HD0170001047000	HD0170001048000
ELBOW O-RING	HD0170001039000	HD0170001042000	HD0170001043000
PIPE O-RING	HD0170001003000	HD0170001036000	HD0170001012000
PIPE PIM	HD0210201008000	HD0210201009000	HD0210201014000
BOLT	HD0240201011000	HD0240201011000	HD0240201011000
LOCK NUT	HD0280403002000	HD0280403002000	HD0280403002000
CAP SCREW	HD0290003021000	HD0290003021000	HD0290003021000

300C SERIES SPARE PARTS

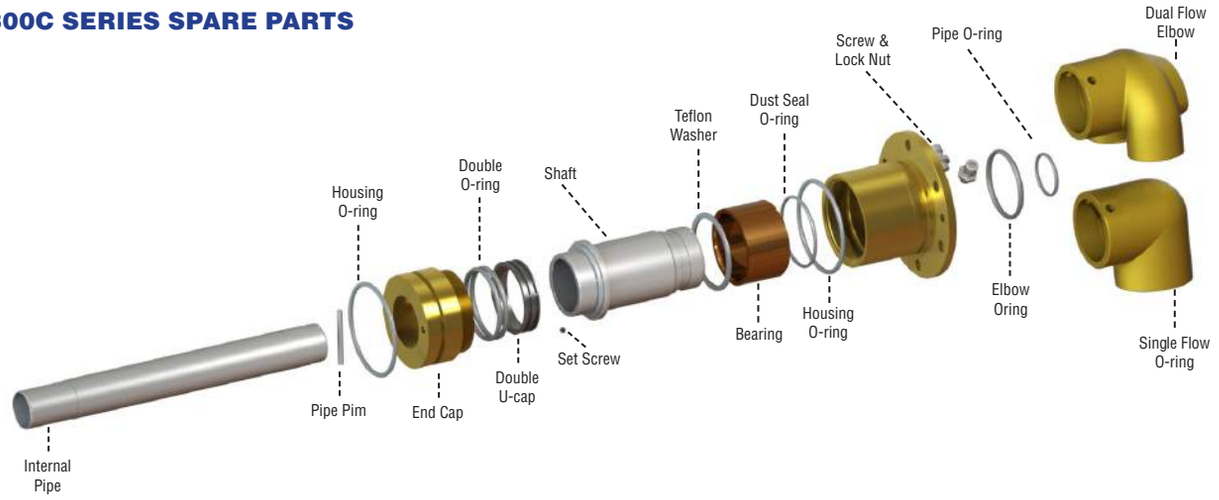

SINGLE FLOW			
DEFINITION	1/2"	3/4"	1"
300C HOUSING	RY0241301002000	RY0241301003000	RY0241301004000
300C END CAP	RY0251101002000	RY0251101003000	RY0251101004000
SHAFT	RY0260101002000	RY0260101003000	RY0260101004000
SINGLE FLOW ELBOW (NPT)	RY0271111204000	RY0271111305000	RY0271111406000
SINGLE FLOW ELBOW (BSPP)	RY0271113204000	RY0271113305000	RY0271113406000
BEARING	HD0100101007000	HD0100101008000	HD0100101009000
TEFLON WASHER	HD0190106003000	HD0190106008000	HD0190106002000
DUST SEAL O-RING	HD0170001036000	HD0170001040000	HD0170001026000
DOUBLE U-CUP	HD0060302001000	HD0060302002000	HD0060302003000
U-CUP O-RING	HD0170001037000	HD0170001040000	HD0170001041000
HOUSING O-RING	HD0170001007000	HD0170001041000	HD0170001029000
ELBOW O-RING	HD0170001009000	HD0170001039000	HD0170001042000
BOLT	HD0240201007000	HD0240201011000	HD0240201011000
LOCK NUT	HD0280403001000	HD0280403002000	HD0280403002000
CAP SCREW	HD0290003021000	HD0290003021000	HD0290003021000

DUAL FLOW			
DEFINITION	1/2"	3/4"	1"
300C HOUSING	RY0241301003000	RY0241301004000	RY0241301005000
300C END CAP	RY0251101003000	RY0251101004000	RY0251101005000
SHAFT	RY0260101003000	RY0260101004000	RY0260101005000
DUAL FLOW ELBOW (NPT)	RY0271211304000	RY0271211405000	RY0271211506000
DUAL FLOW ELBOW (BSPP)	RY0271213304000	RY0271213405000	RY0271213506000
BEARING	HD0100101008000	HD0100101009000	HD0100101010000
TEFLON WASHER	HD0190106008000	HD0190106002000	HD0190106009000
DUST SEAL O-RING	HD0170001040000	HD0170001026000	HD0170001044000
DOUBLE U-CUP	HD0060302002000	HD0060302003000	HD0060302004000
U-CUP O-RING	HD0170001040000	HD0170001041000	HD0170001043000
HOUSING O-RING	HD0170001041000	HD0170001029000	HD0170001045000
ELBOW O-RING	HD0170001009000	HD0170001042000	HD0170001043000
PIPE O-RING	HD0170001003000	HD0170001036000	HD0170001012000
PIPE PIM	HD0210201008000	HD0210201009000	HD0210201014000
BOLT	HD0240201007000	HD0240201011000	HD0240201011000
LOCK NUT	HD0280403001000	HD0280403002000	HD0280403002000
CAP SCREW	HD0290003021000	HD0290003021000	HD0290003021000

300V SERIES

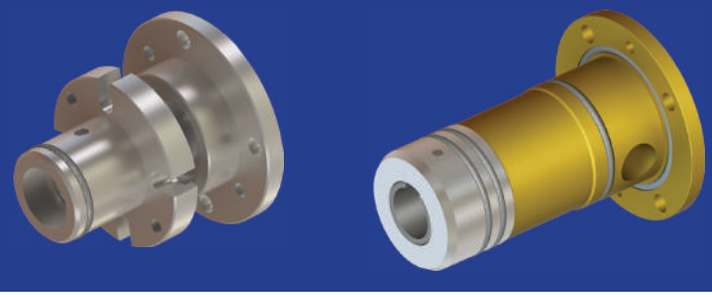

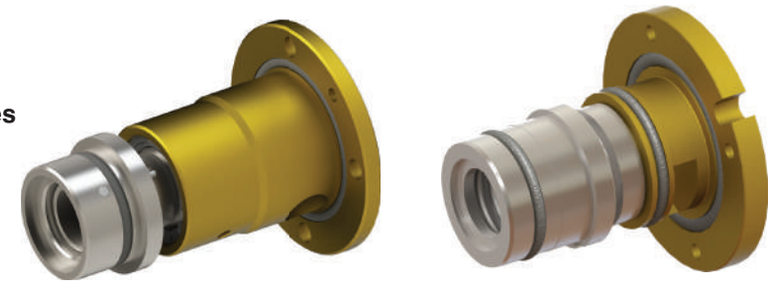

BEARINGLESS CCM JOINTS
For Water at Continuous Casting Machines

- Single and dual flow
- In the shaft mounted design
- Brass housing and elbow
- Stainless steel shaft and internal pipe
- Full flow design
- No internal bearing
- No maintenance required
- No need for flexible hoses
- Complete in stainless steel as option

Seal Options:
- Viton O-ring & Teflon u-cup
- Sic & Sic Seals
- Tuc & Tuc Seals

Application Parameters

Max. Water Pressure	: 10 bar	150psi
Max. Speed	: 100 RPM	100 min^{-1}
Max. Temperature	: 120°C	250°F

For further information, please consult FACTORY or your local distibutor

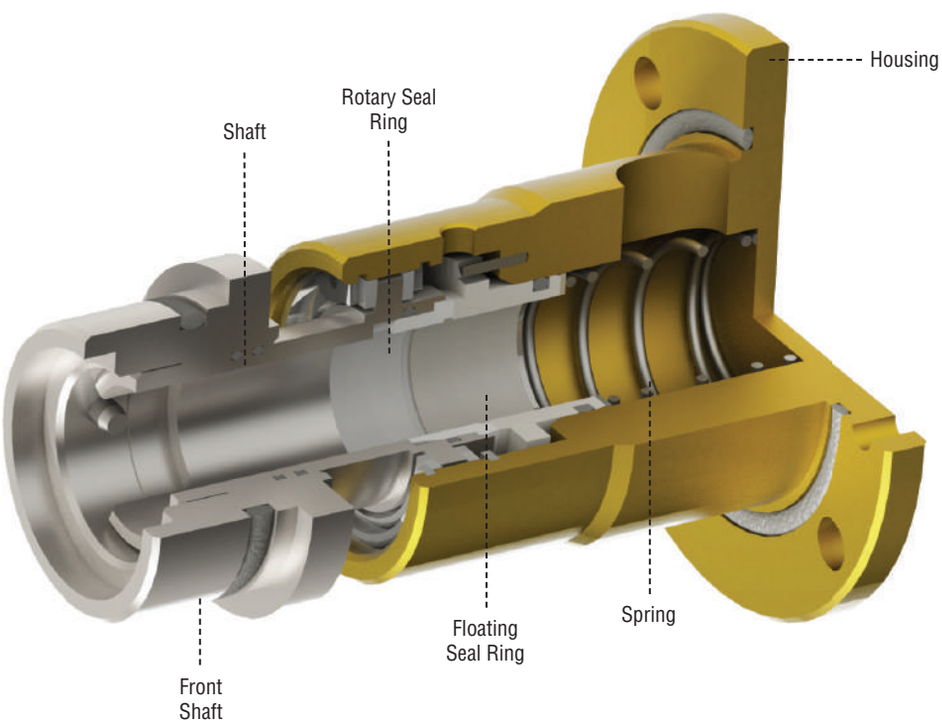

800 SERIES

For COOLANT, WATER
1/4" (DN08) - 3/8" (DN10)

- Single flow
- Self supported rotating joint
- Stainless steel shaft
- Aluminium housing
- Radial/axial connection
- Vent holes on housing
- Slingers for bearing protection
- Full flow
- Balanced silicon carbide mechanical seals
- Tuc seals as option

Application Parameters

Max. Water Pressure	: 70 bar	1000psi
Max. Speed	: 10.000 RPM	10.000 min-1
Max. Temperature	: 120°C	250°F

Avoid working with max. speed at max. pressure

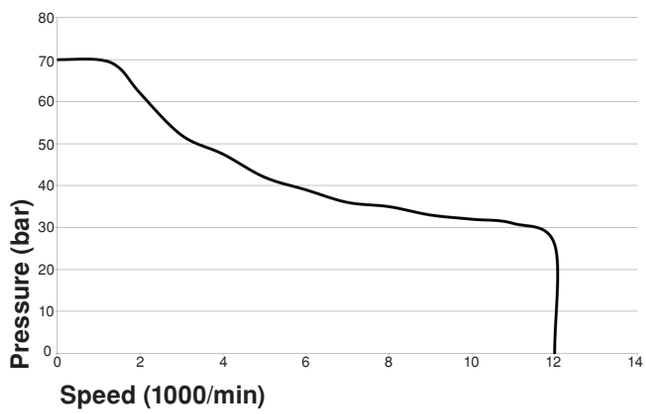

For further information, please consult FACTORY or your local distibutor

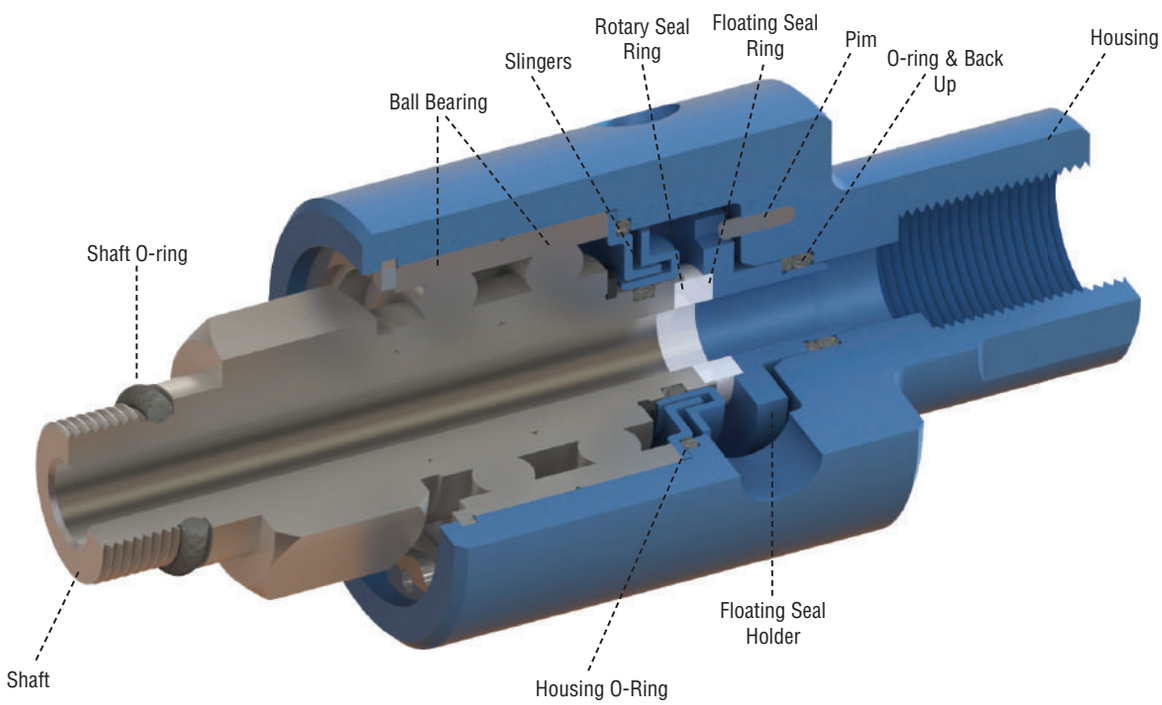

AXIAL

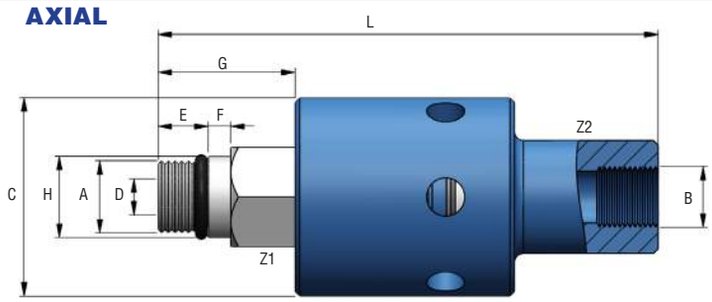

RADIAL

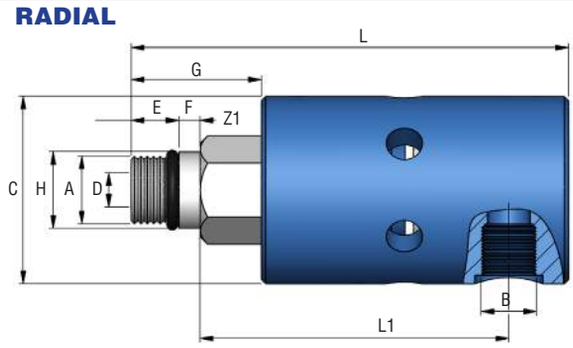

	B		A	STOCK CODE	C	D	E	F	G	H	L	Z1	Z2	WEIGHT
AXIAL	DN08	1/4" NPT	5/8" - 18 UNF LH	808-1010-403L	44	8	14	5	33	0.6555" 0.6550"	109	15/16"	23	0.5 kgs (1.1 lb)
	DN08	1/4" NPT	M16 x 1.5 LH	808-1010-516L	44	8	11	5	30	17.993 17.998	106	24	23	0.5 kgs (1.1 lb)
	DN08	1/4" BSPP	M16 x 1.5 LH	808-1030-516L	44	8	11	5	30	17.993 17.998	106	24	23	0.5 kgs (1.1 lb)
	DN10	3/8" NPT	5/8" - 18 UNF LH	810-1010-403L	44	8	14	5	33	0.6555" 0.6550"	115	15/16"	23	0.5 kgs (1.1 lb)
	DN10	3/8" NPT	M16 x 1.5 LH	810-1010-516L	44	8	11	5	30	17.993 17.998	112	24	23	0.5 kgs (1.1 lb)
	DN10	3/8" BSPP	M16 x 1.5 LH	810-1030-516L	44	8	11	5	30	17.993 17.998	112	24	23	0.5 kgs (1.1 lb)

	B		A	STOCK CODE	C	D	E	F	G	H	L	L1	Z1	WEIGHT
RADIAL	**DN08**	1/4" NPT	5/8" - 18 UNF LH	808-1110-403L	44	8	14	5	33	0.6555" 0.6550"	106	72.5	15/16"	0.5 kgs (1.1 lb)
	DN08	1/4" NPT	M16 x 1.5 LH	808-1110-516L	44	8	11	5	30	17.993 17.998	103	72.5	24	0.5 kgs (1.1 lb)
	DN08	1/4" BSPP	M16 x 1.5 LH	808-1130-516L	44	8	11	5	30	17.993 17.998	103	72.5	24	0.5 kgs (1.1 lb)
	DN10	3/8" NPT	5/8" - 18 UNF LH	810-1110-403L	44	8	14	5	33	0.6555" 0.6550"	106	72.5	15/16"	0.5 kgs (1.1 lb)
	DN10	3/8" NPT	M16 x 1.5 LH	810-1110-516L	44	8	11	5	30	17.993 17.998	103	72.5	24	0.5 kgs (1.1 lb)
	DN10	3/8" BSPP	M16 x 1.5 LH	810-1130-516L	44	8	11	5	30	17.993 17.998	103	72.5	24	0.5 kgs (1.1 lb)

800 SERIES SPARE PARTS

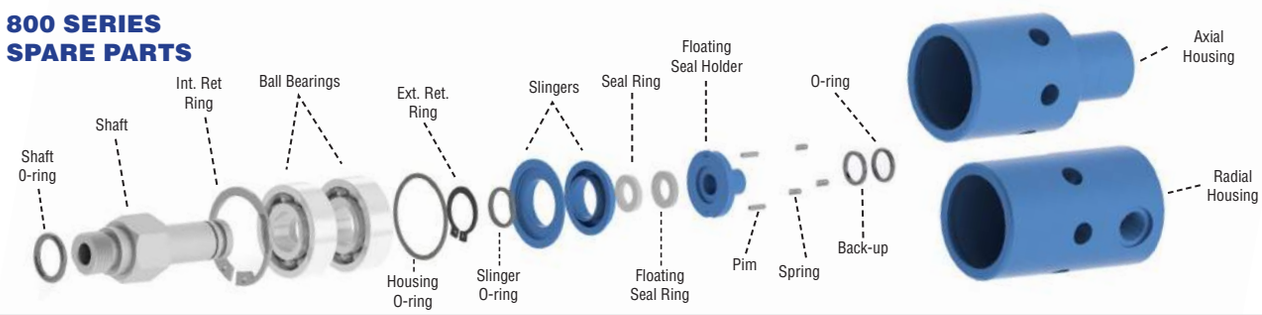

PART NAME	1/4" STOCK CODE	3/8" STOCK CODE
800 SERIES HOUSING - AXIAL - NPT	RY0630101102R00	RY0630101104R00
800 SERIES HOUSING - AXIAL - BSPP	RY0630101302R00	RY0630101304R00
800 SERIES HOUSING - RADIAL - NPT	RY0630201102R00	RY0630201104R00
800 SERIES HOUSING - RADIAL - BSPP	RY06301201302R00	RY06301201304R00
800 SERIES SHAFT (5/8" - 18 UNF LH)	RY0641011402L00	
800 SERIES SHAFT (M16x1.5 LH)	RY0641011516L00	
SHAFT O-RING	HD0170002164000	
INTERNAL RETAINING RING	HD0180201007000	
BALL BEARING	HD0160103024000	
HOUSING O-RING	HD0170002173000	
EXTERNAL RETAINING RING	HD0180101005000	
SLINGER O-RING	HD0170002018000	
SLINGER SET	RY0650105001000	
ROTARY SEAL RING	HD0050406001000	
FLOATING SEAL RING	HD0050406001000	
FLOATING SEAL HOLDER	RY0670101001000	
PIM	HD0210201002000	
SPRING	HD0150001037000	
FLOATING SEAL O-RING	HD0170002002000	
FLOATING SEAL BACK-UP	HD0060102010000	

800S SERIES

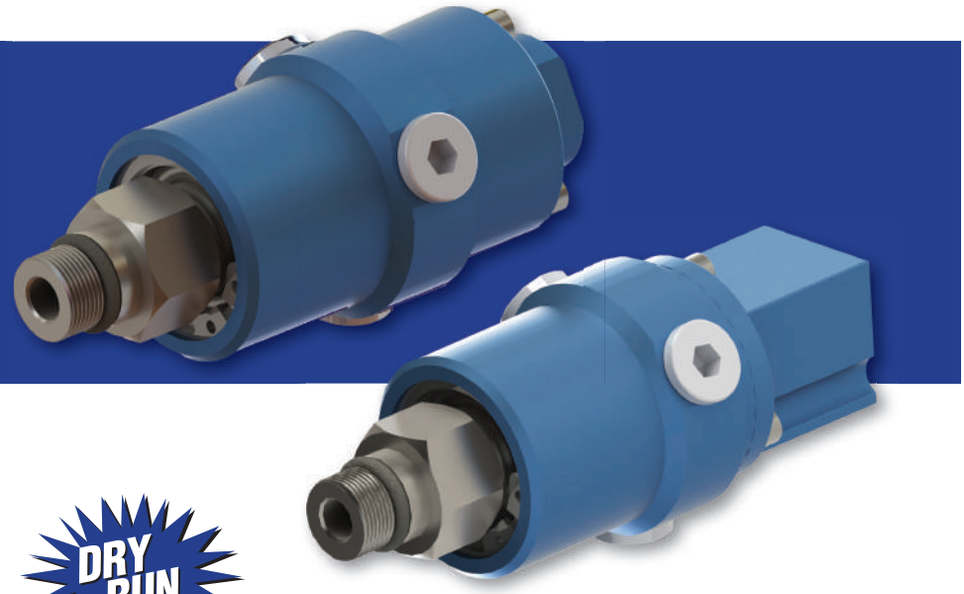

For COOLANT, WATER
1/4" (DN08) - 3/8 (DN10)

DRY RUN

- Single flow
- Self supported rotating joint
- Stainless steel shaft
- Aluminium housing
- Radial or axial connection
- Vent holes on housing
- Slingers for bearing protection
- Full flow
- Balanced silicon carbide mechanical seals
- Tuc Seals as option

Application Parameters

Max. Water Pressure	: 70 bar	1000psi
Max. Speed	: 15.000 RPM	15.000 min-1
Max. Temparature	: 120°C	250°F

Avoid working with max. speed at max. pressure

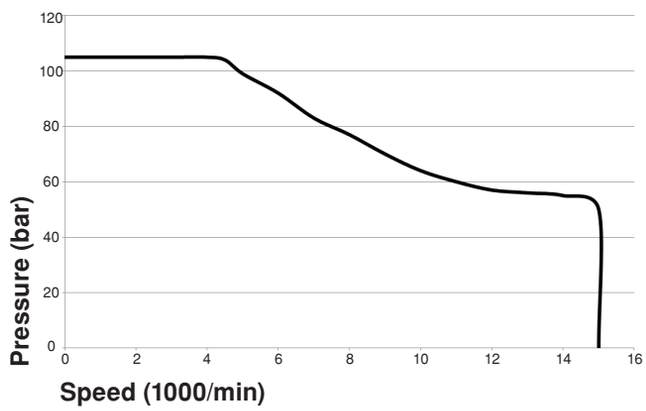

For further information, please consult FACTORY or your local distibutor

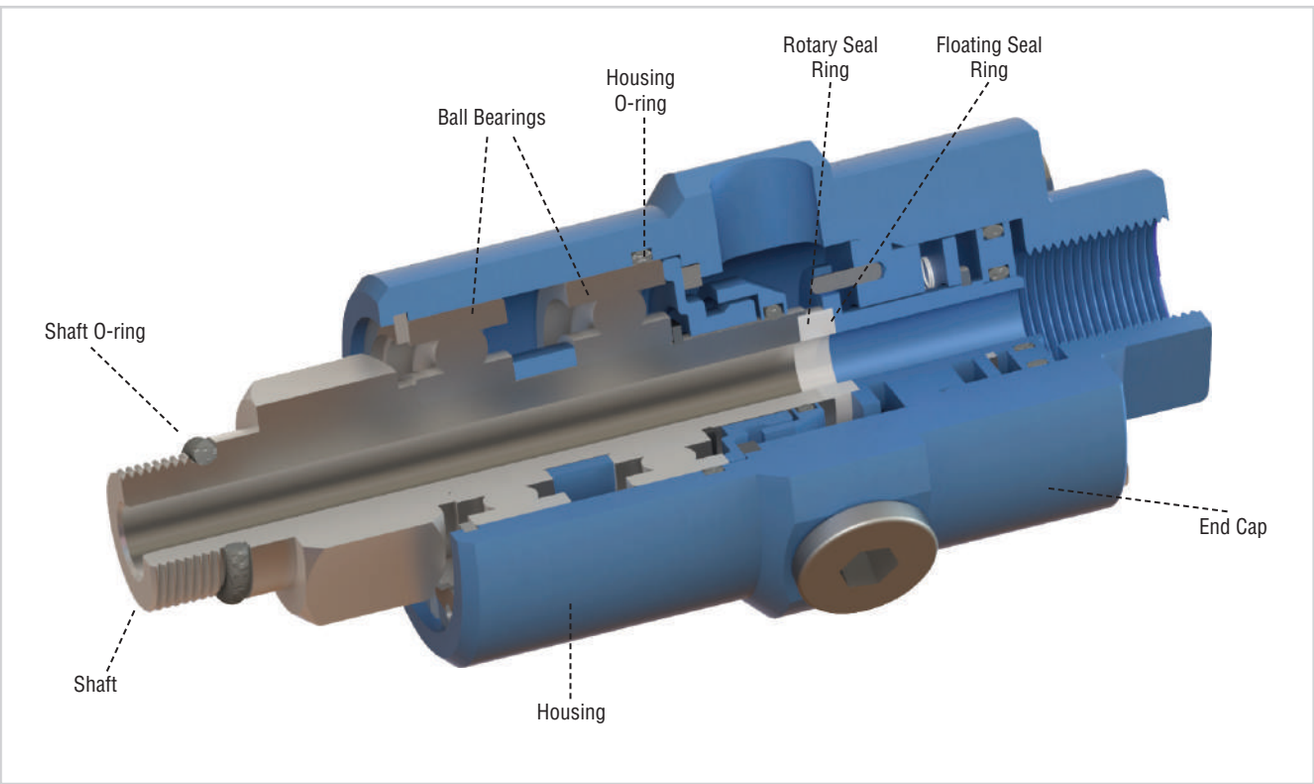

AXIAL

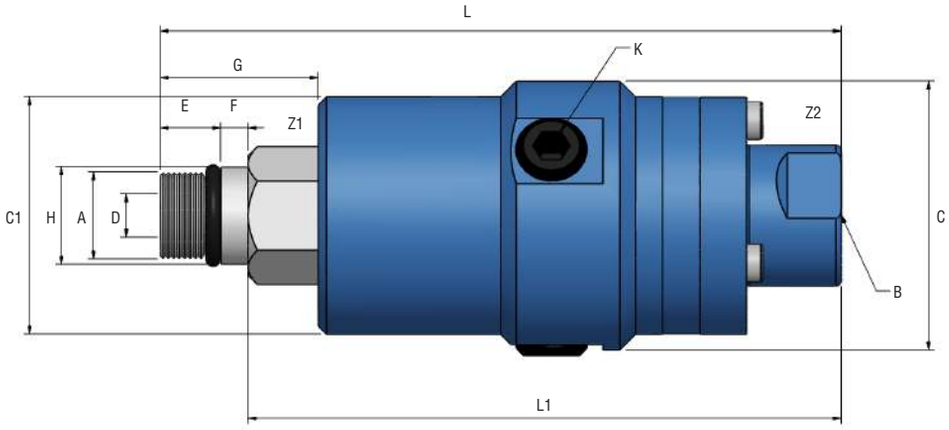

	B		A	STOCK CODE	C	C1	D	E	F	G	H	K	L	L1	Z1	Z2	WEIGHT
AXIAL	DN10	3/8" NPT	5/8" - 18 UNF LH	810-2010-403L	49.5	43.75	8	15	5	35	0.6555" 0.6550"	1/4" NPT	123.5	103.5	15/16"	22	0.5 kgs (1.1 lb)
	DN10	3/8" BSPP	M16 x 1.5 LH	810-2030-516L	49.5	43.75	8	11	5	31	17.993 17.998	1/4" BSPP	119.5	103.5	24	22	0.5 kgs (1.1 lb)

RADIAL

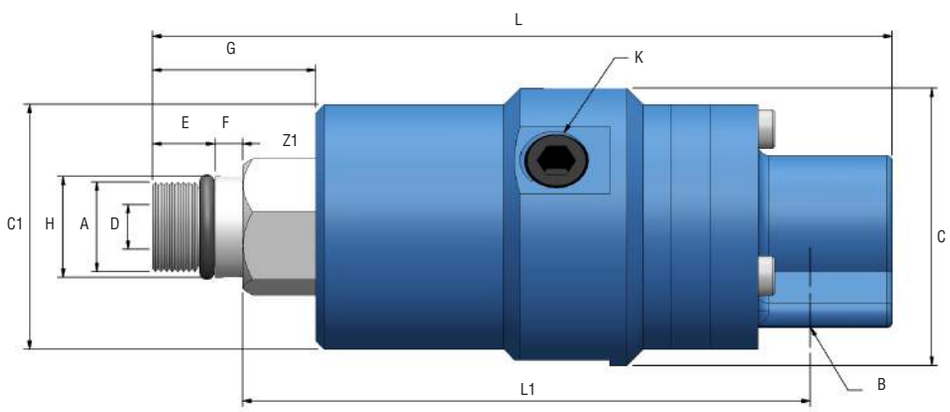

	B		A	STOCK CODE	C	C1	D	E	F	G	H	K	L	L1	Z1	WEIGHT
RADIAL	DN10	3/8" NPT	5/8" - 18 UNF LH	810-2110-403L	49.5	43.75	8	15	5	35	0.6555" 0.6550"	1/4" NPT	131	99	15/16"	0.5 kgs (1.1 lb)
	DN10	3/8" BSPP	M16 x 1.5 LH	810-2130-516L	49.5	43.75	8	11	5	31	17.993 17.998	1/4" BSPP	127	99	24	0.5 kgs (1.1 lb)
	DN10	3/8" BSPP	2 x Flat 12	810-2130-0010	49.5	43.75	8	N/A	16	26	11.984 11.966	1/4" BSPP	122	99	N/A	0.5 kgs (1.1 lb)
	DN10	3/8" BSPP	Female 12	810-2130-0020	49.5	43.75	8	N/A	32	34	12.027 12.000	1/4" BSPP	130	99	24	0.5 kgs (1.1 lb)
	DN10	3/8" BSPP	Hexagon 11	810-2130-0030	49.5	43.75	8	N/A	21	34	12.984 12.957	1/4" BSPP	130	99	N/A	0.5 kgs (1.1 lb)

800SR SERIES

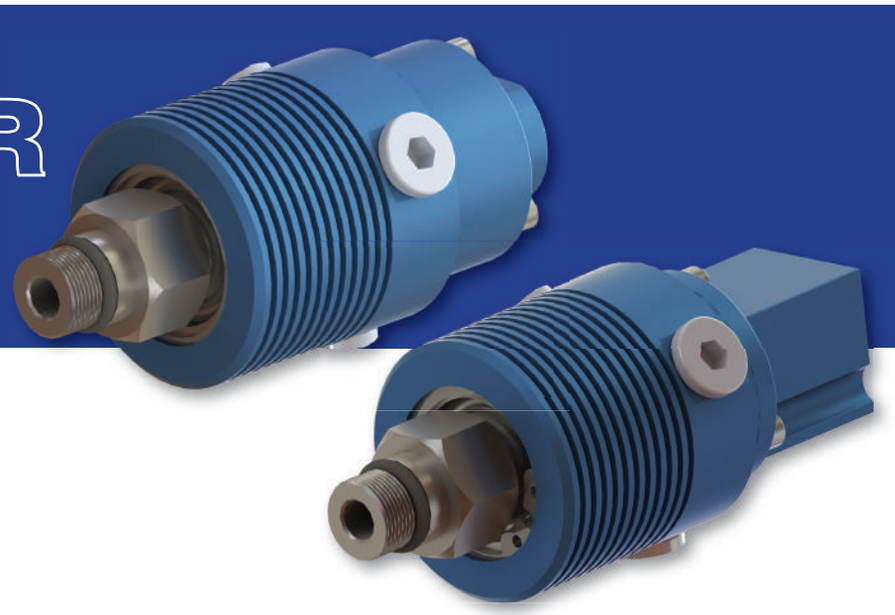

For COOLANT, WATER
1/4" (DN08) - 3/8" (DN10)

- Single flow
- Self supported rotating joint
- Stainless steel shaft
- Aluminium housing
- Radial or axial connection
- Vent holes on housing
- Slingers for bearing protection
- Full flow
- Balanced silicon carbide mechanical seals
- Tuc Seals as option

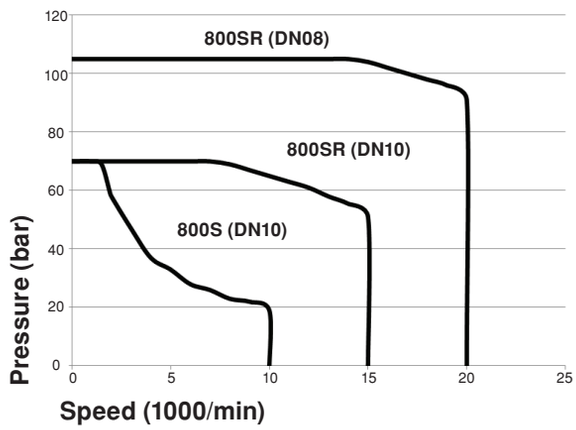

Application Parameters

Max. Water Pressure	: 100 bar	1.450psi
Max. Speed	: 20.000 RPM	20.000 min^{-1}
Max. Tempereture	: 120°C	250°F

Avoid working with max. speed at max. pressure

For further information, please consult FACTORY or your local distibutor

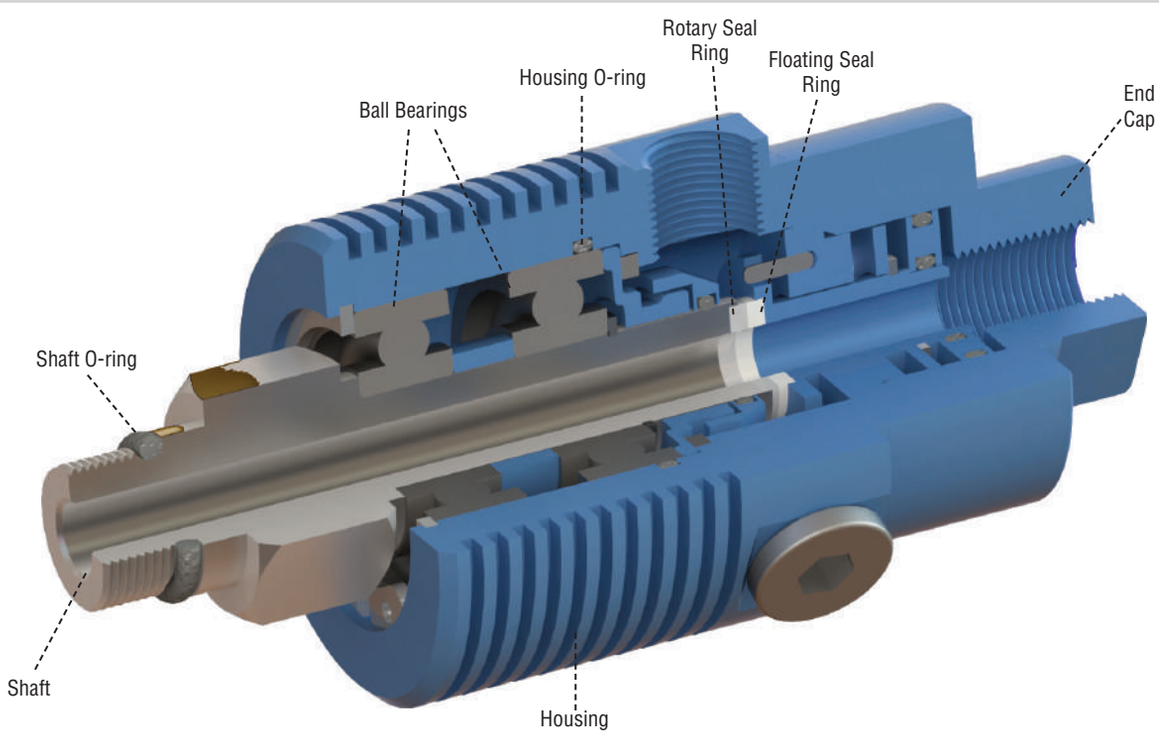

AXIAL

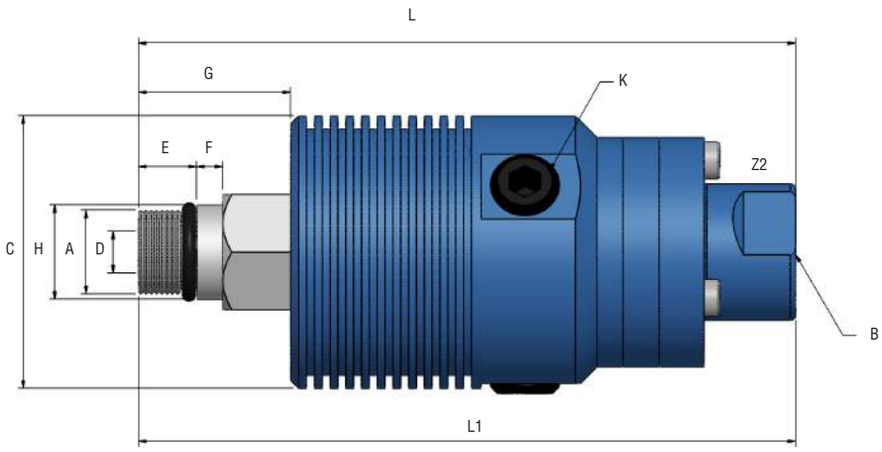

	B		A	STOCK CODE	C	C1	D	E	F	G	H	K	L	L1	Z1	Z2	WEIGHT
AXIAL	DN10	3/8" NPT	5/8" - 18 UNF LH	810-2010-403L	49.5	43.75	8	15	5	35	0.6555" 0.6550"	1/4" NPT	132	123.5	15/16"	22	0.5 kgs (1.1 lb)
	DN10	3/8" BSPP	M16 x 1.5 LH	810-2030-516L	49.5	43.75	8	11	5	31	17.993 17.998	1/4" BSPP	129	119.5	24	22	0.5 kgs (1.1 lb)

RADIAL

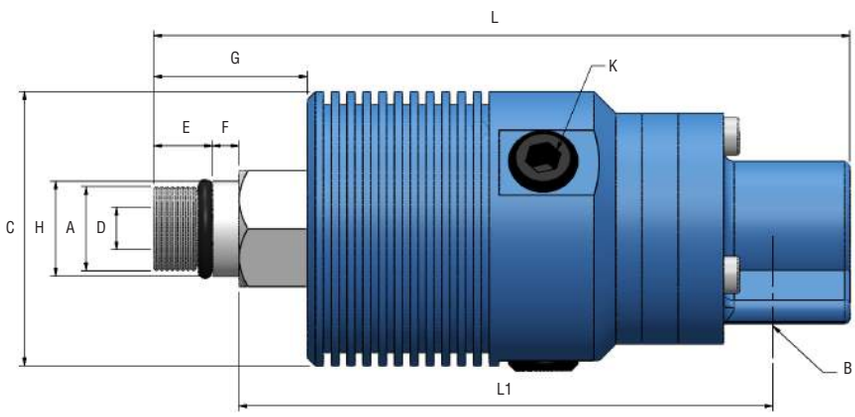

	W		A	STOCK CODE	C	C1	D	E	F	G	H	K	L	L1	Z1	WEIGHT
RADIAL	DN10	3/8" NPT	5/8" - 18 UNF LH	810-2110-403L	49.5	43.75	8	15	5	35	0.6555" 0.6550"	1/4" NPT	131	99	15/16"	0.5 kgs (1.1 lb)
	DN10	3/8" BSPP	M16 x 1.5 LH	810-2130-516L	49.5	43.75	8	11	5	31	17.993 17.998	1/4" BSPP	127	99	24	0.5 kgs (1.1 lb)
	DN10	3/8" BSPP	2 x Flat 12	810-2130-0010	49.5	43.75	8	N/A	16	26	11.984 11.966	1/4" BSPP	127	99	N/A	0.5 kgs (1.1 lb)
	DN10	3/8" BSPP	Female 12	810-2130-0020	49.5	43.75	8	N/A	32	34	12.027 12.000	1/4" BSPP	129	99	24	0.5 kgs (1.1 lb)
	DN10	3/8" BSPP	Hexagon 11	810-2130-0030	49.5	43.75	8	N/A	21	34	12.984 12.957	1/4" BSPP	131	99	N/A	0.5 kgs (1.1 lb)

800S + 800SR SPARE PARTS

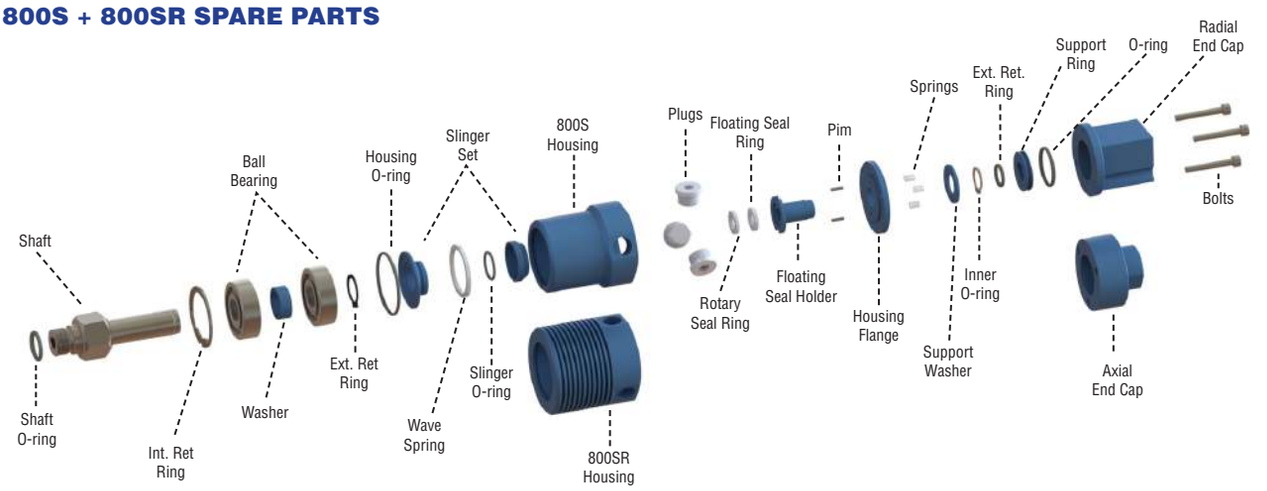

PART NAME	1/4"	3/8"
	STOCK CODE	STOCK CODE
800S SERIES HOUSING	RY0630301030000	
800SR SERIES HOUSING	RY0630401030000	
800S/SR SERIES SHAFT (5/8" - 18 UNF LH)	RY0642011402L00	
800S/SR SERIES SHAFT (M16x1.5 LH)	RY0642011516L00	
SHAFT O-RING	HD0170002164000	
INTERNAL RETAINING RING	HD0180201007000	
BALL BEARING	HD0160103024000	
WASHER	HD0680101001000	
HOUSING O-RING	HD0170002174000	
EXTERNAL RETAINING RING	HD0180101005000	
SLINGER O-RING	HD0170002175000	
SLINGER SET	RY0650205001000	
ROTARY SEAL RING	HD0050406001000	
FLOATING SEAL RING	HD0050406001000	
FLOATING SEAL HOLDER	RY0670201001000	
EXTERNAL RETAINING RING	HD0180101003000	
HOUSING FLANGE	HD0700101001000	
SPRING	HD0150001038000	
SUPPORT WASHER	HD0710201001000	
HOLDER SUPPORT	HD0710101001000	
SUPPORT OUTER O-RING	HD0170002063000	
SUPPORT INNER O-RING	HD0060102018000	
PIM	HD0210201002000	
800S/SR SERIES END CAP - AXIAL - NPT	RY069101102R000	RY069101104R000
800S/SR SERIES END CAP - AXIAL - BSPP	RY069101302R000	RY069101304R000
800S/SR SERIES END CAP - RADIAL - NPT	RY069201102R000	RY069201104R000
800S/SR SERIES END CAP - RADIAL - BSPP	RY069201302R000	RY069201304R000
BOLTS	HD0240201001000	

ASSEMBLY INSTRUCTIONS

Spindle

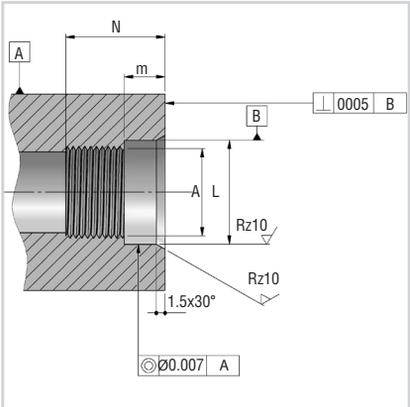

Shaft Nose

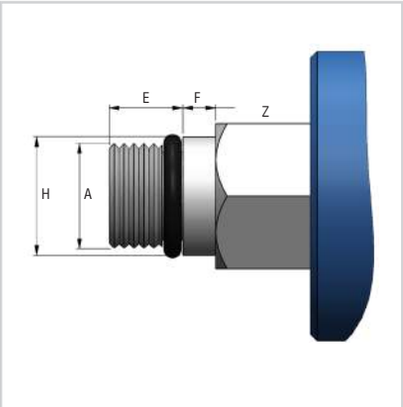

Assembly

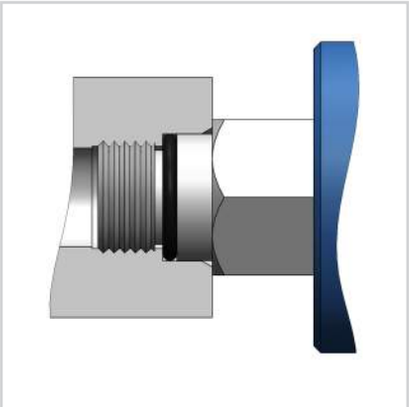

ASSEMBLY OF BORE MOUNTED JOINTS

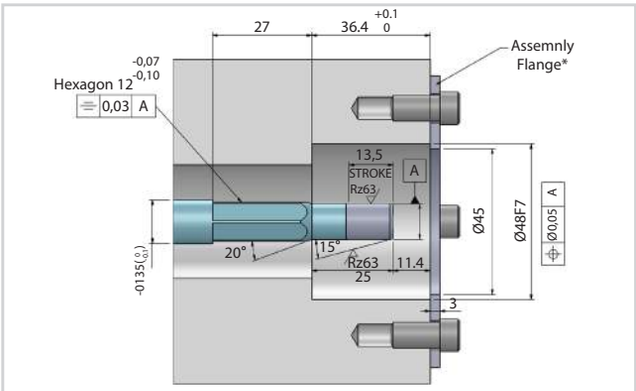

* Supplied by customer

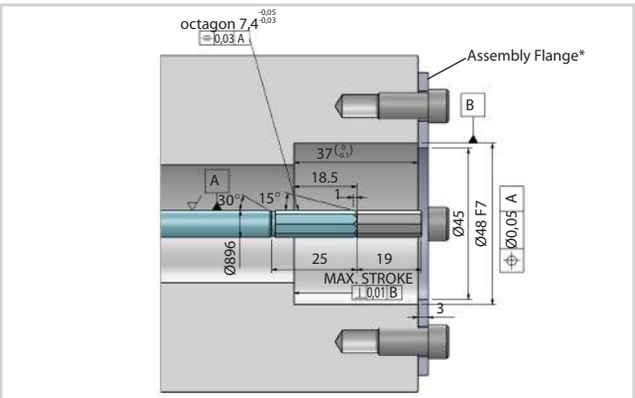

* Supplied by customer

Spindle end and rotating joint shaft dimensions must be manufactured in close tolerances.

SHAFT NOSE CONNECTION			SHAFT NOSE		SPINDLE		
A	F	H	I	M	X	Y	Z
5/8" - 18 UNF	9/16"	15/16"	0.6555"	3/16"	0.6560" / 0.6556"	9/32"	13/16"
5/8" - 18 UNF	9/16"	15/16"	0.6249"	3/32"	0.6254" / 0.6250"	3/16"	9/16"
M16 x 1.5	11	24	17933 / 17.988	5	18 / 17.995	.8.5	17
M16 x 1.5	11	24	16.025 / 16.020	5	16.037 / 16.027	7	17
M12 x 1.25	11	24	13.994 / 13.989	5	14.001 / 13.995	7	17
M12 x 1	13	15	12.995 / 12.986	6	13.005 / 13.000	9	23
M12 x 1.25	13	15	12.995 / 12.986	6	13.005 / 13.000	9	23
M10 x 1	11	17	10.998 / 10.988	3	11.024 / 11.006	.5.2	15
M8 x 1	12.5	15	9.000 / 8.994	3.5	9.005 / 9.000	6	18

APPLICATION STYLES

SINGLE FLOW

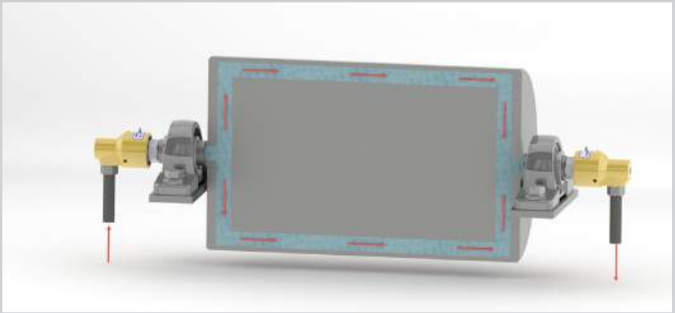

Single flow joints are used when supply and return lines are connected to opposite sides of the cylinder.

DUAL FLOW - STATIONARY SIPHON PIPE

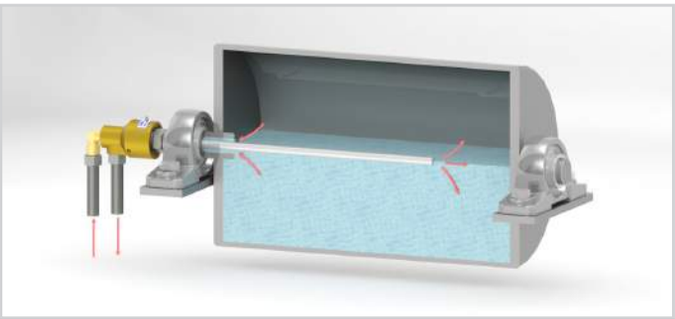

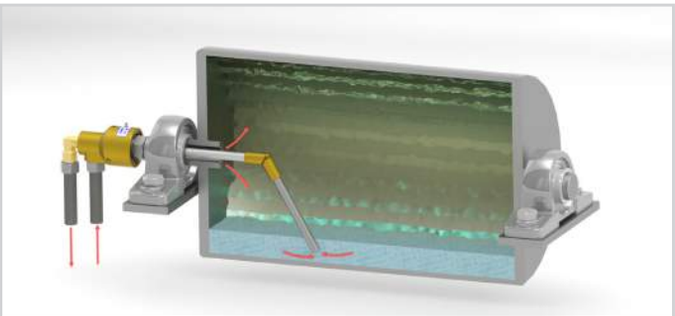

Dual flow joints are used when supply and return lines are connected to one side of the cylinder. Internal pipe is stationary.

DUAL FLOW - ROTARY SIPHON PIPE

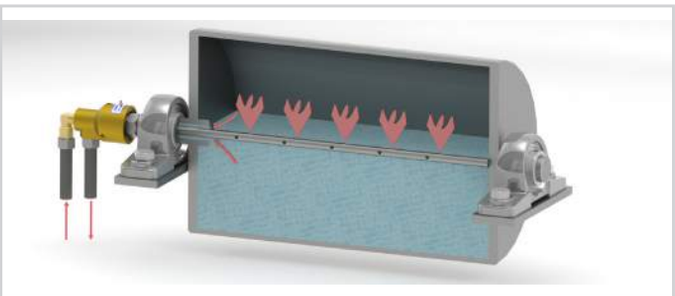

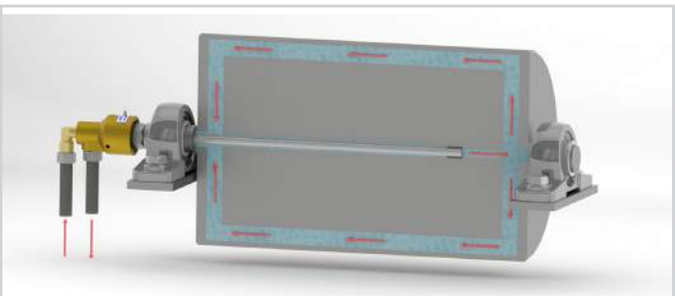

Dual flow joints are used when supply and return lines are connected to one side of the cylinder. Internal pipe rotates with the rotating cylinder.

SIPHON ELBOW

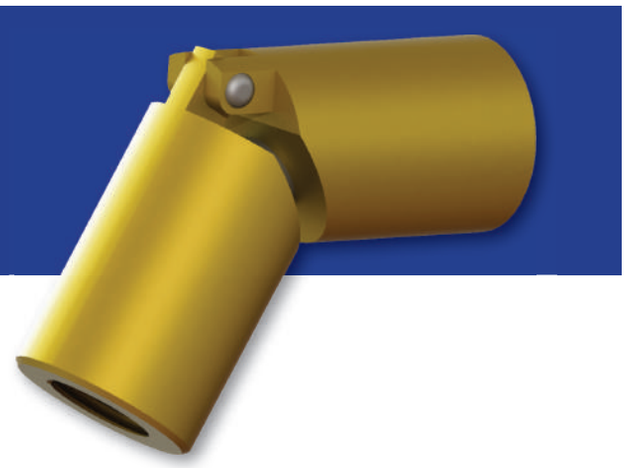

1/4" (DN06) - 1" (DN25)

- Brass or stainless steel material alternatives
- Easily installed
- Leak tight sealing
- For slow-moving applications where condensate is in puddle stage

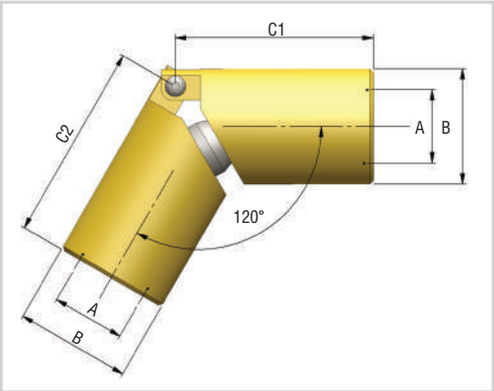

A	STOCK CODE	B	C1	C2
1/4" NPT	0032-120-100	22	44.5	44.5
1/4" BSPP	0032-120-300			
3/8" NPT	0033-120-100	24	44.5	44.5
3/8" BSPP	0033-120-300			
1/2" NPT	0034-120-100	33	56.5	56.5
1/2" BSPP	0034-120-300			
3/4" NPT	0035-120-100	39	60	60
3/4" BSPP	0035-120-300			
1" NPT	0036-120-100	49	70	70
1" BSPP	0036-120-300			

SPRING ENERGIZED SIPHON ELBOW

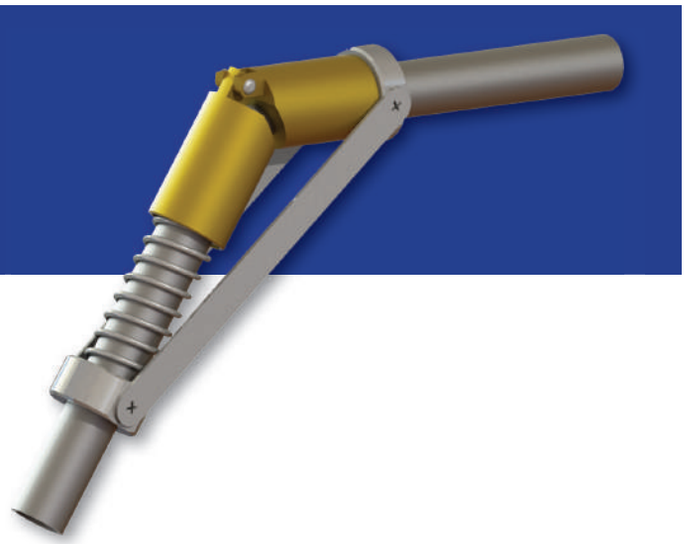

1/2" (DN15) -1" (DN25)

- Brass or stainless steel material alternatives
- Easily installed
- Leak tight sealing
- For slow-moving applications where condensate is in puddle stage

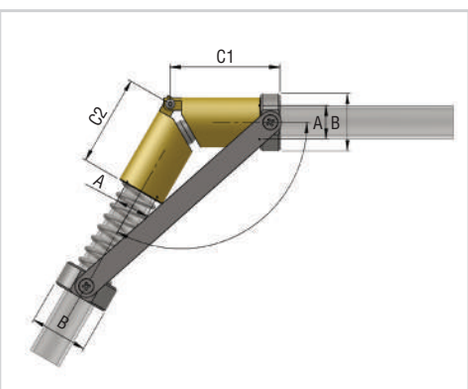

A	STOCK CODE	B	C1	C2
1/2" NPT	0034-220-100	36	68.5	56.5
1/2" BSPP	0034-220-300			
3/4" NPT	0035-220-100	42	72	65.5
3/4" BSPP	0035-220-300			
1" NPT	0036-220-100	55	85	70
1" BSPP	0036-220-300			

OUICK RELEASE FLANGES

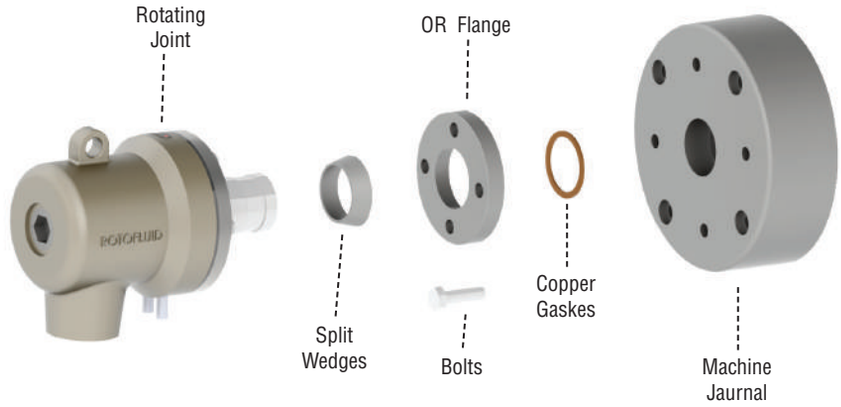

- Simple and easy to assemble to the machine journal
- Eliminates need to stock threaded shaft according to machine rotation
- Can be used on machines with clockwise or counter clockwise rotation
- Can be used with all models of ROTOFLUID joints.

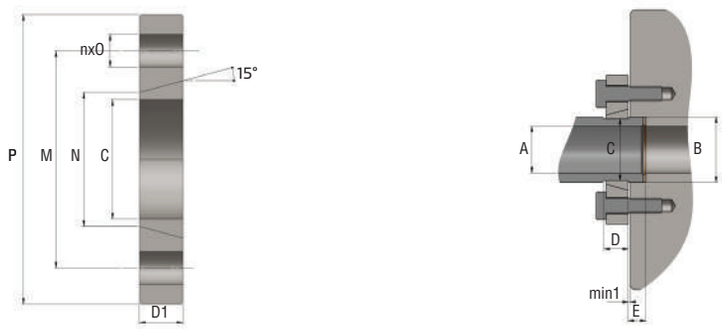

SIZE		QR FLANGE	SPLIT WEDGES	COPPER GASKET	A	B	C	D	D1	E	M	N	n x O	P
DN15	1/2”	RY0180101004000	RY0190101004000	HD0190103013000	15.00	24.00	22.00	11.00	10.00	6.00	70.00	26.00	4xQ9	50.00
		RY0180101004010	RY0190101004010	HD0190103014000	12.70	20.70	20.00	16.00	12.70	9.50	95.20	26.00	4xQ9,5	66.70
DN20	3/4”	RY0180101005000	RY0190101005000	HD0190103015000	20.00	30.00	28.00	13.00	12.00	8.00	75.00	32.00	4xQ9	55.00
		RY0180101005010	RY0190101005010	HD0190103016000	19.00	26.00	24.50	17.00	15.00	11.10	115.00	32.00	4x11,1	76.20
DN25	1”	RY0180101006000	RY0190101006000	HD0190103017000	25.00	35.00	33.00	13.00	12.00	8.00	80.00	37.00	4xQ9	60.00
		RY0180101006010	RY0190101006010	HD0190103018000	24.50	32.50	31.00	17.00	15.00	11.10	127.00	37.00	4xQ14,3	88.90
DN32	1 1/4”	RY0180101007000	RY0190101007000	HD0190103019000	32.00	45.00	43.00	13.00	12.00	8.00	100.00	48.00	4xQ11	75.00
		RY0180101007010	RY0190101007010	HD0190103020000	32.50	41.30	39.50	19.00	16.00	12.70	127.00	48.00	4xQ14,3	88.90
DN40	1 1/2”	RY0180101008000	RY0190101008000	HD0190103021000	38.00	50.00	48.00	16.00	15.00	10.00	105.00	53.00	4xQ11	80.00
		RY0180101008010	RY0190101008010	HD0190103022000	38.00	47.60	45.00	22.00	20.00	12.70	140.00	53.00	4xQ14,3	100.00
DN50	2”	RY0180101009000	RY0190101009000	HD0190103023000	50.00	65.00	63.00	16.00	15.00	10.00	130.00	69.00	4xQ14	100.00
		RY0180101009010	RY0190101009010	HD0190103024000	48.00	59.10	57.00	22.00	20.00	15.90	165.00	69.00	4xQ14,3	120.70
DN65	2 1/2”	RY0180101010000	RY0190101010000	HD0190103025000	66.00	85.00	82.00	16.00	15.00	10.00	150.00	89.00	4xQ14	120.00
		RY0180101010010	RY0190101010010	HD0190103026000	62.00	72.20	69.00	28.50	26.00	19.00	165.00	89.00	4xQ14,3	120.70
DN80	3”	RY0180101011000	RY0190101011000	HD0190103027000	81.00	105.00	102.00	20.00	18.00	12.00	180.00	109.00	4xQ18	145.00
		RY0180101011010	RY0190101011010	HD0190103027000	81.00	105.00	102.00	34.00	30.00	30.00	205.00	109.00	4xQ18	170.00
		RY0180101011020	RY0190101011010	HD0190103028000	73.00	87.30	84.00	32.00	31.00	22.20	203.00	109.00	5xQ17,5	171.50
DN100	4”	RY0180101013000	RY0190101012000	HD0190103029000	98.00	114.00	110.00	22.00	20.00	12.00	195.00	120.00	6xQ18	160.00
		RY0180101013010	RY0190101012010	HD0190103029000	95.00	114.00	110.00	34.00	30.00	30.00	220.00	120.00	6xQ18	185.00
		RY0180101013020	RY0190101012020	HD0190103030000	97.00	112.70	109.50	38.00	35.00	25.40	229.00	120.00	6xQ17,5	190.50
		RY0180101013030	RY0190101012020	HD0190103030000	97.00	112.70	109.50	38.00	35.00	25.40	229.00	120.00	8XQ17,5	190.50
DN125	5”	RY0180101014000	RY0190101014000	HD0190103031000	120.00	142.00	137.00	25.00	22.00	20.00	225.00	147.00	6xQ18	190.00
		RY0180101014010	RY0190101014010	HD0190103032000	120.00	150.00	145.00	39.00	35.00	35.00	260.00	155.00	8xQ18	225.00
		RY0180101014020	RY0190101014020	HD0190103033000	122.00	139.20	136.00	42.00	39.00	32.00	292.00	155.00	8xQ18	235.00
DN150	6”	RY0180101015000	RY0190101015000	HD0190103034000	145.00	170.00	165.00	28.00	25.00	25.00	255.00	178.00	8xQ18	220.00
		RY0180101015010	RY0190101015010	HD0190103035000	145.00	180.00	175.00	44.00	40.00	40.00	300.00	185.00	8xQ18	260.00
		RY0180101015020	RY0190101015020	HD0190103036000	146.00	168.00	165.00	44.00	41.00	32.00	330.00	185.00	8xQ22,2	279.50
DN200	8”	RY0180101017000	RY0190101017000	HD0190103037000	195.00	225.00	220.00	32.00	28.00	30.00	310.00	232.00	8xQ18	275.00
		RY0180101017010	RY0190101017010	HD0190103038000	195.00	230.00	224.00	49.00	45.00	45.00	360.00	235.00	8xQ18	320.00
		RY0180101017020	RY0190101017020	HD0190103039000	184.00	203.00	200.00	47.50	44.50	32.00	381.00	235.00	8xQ22,2	304.80
DN250	10”	RY0180101018000	RY0190101018000	HD0190103040000	240.00	280.00	273.00	40.00	37.00	35.00	390.00	290.00	8xQ23	350.00
		RY0180101018010	RY0190101018010	HD0190103041000	240.00	285.00	273.00	54.00	50.00	50.00	435.00	295.00	8xQ23	380.00
DN300	12”	RY0180101019000	RY0190101019000	HD0190103042000	295.00	340.00	332.00	45.00	42.00	40.00	470.00	350.00	16XQ23	410.00

All ROTOFLUID joints are lubricated in the factory and tested for installation before shipment.

All ROTOFLUID joints which are equipped with grease fittings must be lubricated periodically. Lubrication of the ball bearings or seal faces is required.

Joints which are not equipped with grease fittings are lubricated in the factory and do not need lubrication for life unless they are disassembled for inspection of the wear.

To prevent damage of the ball bearings and seals, only low pressure grease equipment must be used. Do not apply to much grease on ball bearings. Over greasing will result damage of the bearings. All joints which are equipped with grease fittings will also have grease relief valve to protect ball bearings from over greasing.

Lubrication frequency and amounts of grease vary greatly depending on joint size, operation, temperature, rpm, etc.

The chart below shows approximate grams of the lubrication.

Size	Std Temp (Volume gr)	High Temp. (Volume gr)
1/8”	4	7.5
1/4”	4	7.5
3/8”	4	7.5
1/2"	4	13
3/4"	10.5	20
1”	10.5	23
1 1/4"	11.5	28.5
1 1/2"	17.5	39.5
2”	17.5	49
2 1/2”	45	75
3”	70	100
4”	95	125

The graphs on the right show approximate lubrication frequency and amounts of grease for 3 application conditions.

For applications exceeding heavy duty operating conditions, please consult your lubricant supplier for application based lubrication instructions.

Light Duty Operating Conditions:
Up to 75°C
Few vibrations
Clean environment

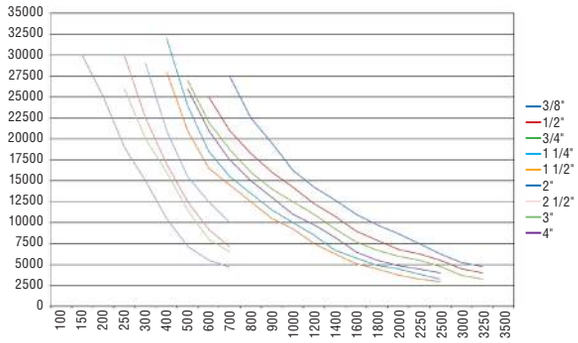

Medium-Heavy Duty Operating Conditions:
75-120°C
Vibrations
Polluted environment

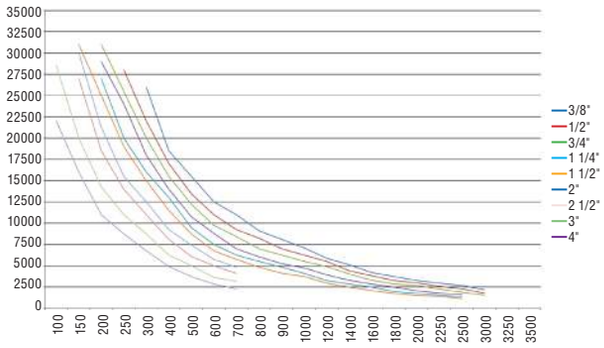

Heavy Duty Operating Conditions:
121-200°C
Vibrations
Polluted Environment

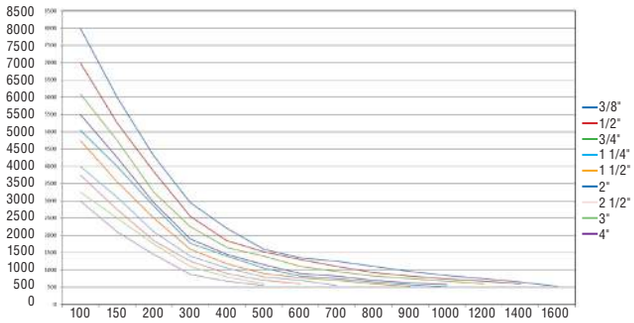

1b)

3a)

3b)

4a)

4b)

7a)

7b)

10a)

10b)

13)

14a)

14b)

15a)

15b

1.First hold the housing of the joint with a bench wise. Do not clamp too tightly, it will damage housing or bearings.

2. If the joint is used for single flow, apply adhesive or teflon tape to the threads of the pipe plug and fix it to the second port of the joint.

3. If the joint is used for dual flow,
   3.a) apply adhesive or teflon tape to the thread of the siphon pipe and fix it to the dual flow elbow.
   3.b) Apply adhesive or teflon tape to the thread of the dual flow elbow, becareful that the internal pipe does not damage internal parts of the joint when assembling dual flow elbow and pipe to the joint and fix elbow to the second port of the joint.

4. Apply sealant/adhesive or teflon tape to the threads of the hoses and assemble them to the housing.

5. If housing connections are SAE Flange, place o-rings into the grooves and fix flanges of the hoses with appropriate bolts.

6.Clean machine bore surface before assembling.

7. Apply adhesive or teflon tape to the thread of the shaft and install the joint to the machine. When installing, pay attention not to install eccentrically.

8. If the joint shaft is flanged,
   8.a) Clean rotating joint flange surface
   8.b) Place a new flange sealing o-ring into the flange groove
   8 c) Align rotating joint flange and machine bore flange.
   8 d) Fix flange to the bore of the roll with appropriate bolts. Make sure the sealing o-ring on the shaft flange is in position.

9. If the joint shaft is quick release; put a new copper washer on the bore of the roll, assemble qr flange onto the shaft, place split rings onto the socket around the shaft correspondingly, place qr flange onto the split wedges and fix the flange to the bore of the roll with appropriate bolts.

10.Connect hoses to the supply and return lines. Use flexible hoses and never install joint directly to the pipes.

11. Assemble hoses without sharp bends or without stress. Rotary joints are designed to float with the hoses.

12. For air and hydraulic use rubber or steel flexible hoses. For water and steam, use stainless steel flexible hoses.

13. Install hoses with curves in direction of rotation.

14. Flexible hoses must not be twisted during operation. Twisted hoses lose flexibility. Use pipe fittings for proper installation.

15. If rotating joint and pipe axis are not on the same axis, hose must be installed with a smooth curve.

16. Flexible hoses must not be twisted during operation. Use proper pipe fittings.

17. After assembly; control rotation of joint. If any noise, wobble, vibration, knocking or noise show up or if any eccentricity seems; disassemble the joint from the machine and assemble it again.

ALL ROTOFLUID joints are precision made sealing joints. Sealing is assured between rotary shaft and static housing. Improper use can cause leakage and failure.

Although **ROTOFLUID** joints are high quality and precision made joints, it's very important that they should be treated carefully. They should be inspected periodically and when a joint starts to leak, joint must be replaced or repaired. Never work with leaking joints.

ROTOFLUID joints must not be used for applications other than specified in this catalogue. It is forbidden to use ROTOFLUID joints with flammable and explosive joints or corrosive fluids. The use of ROTOFLUID with these products is permissible with our approval. For applications that are not stated in this catalogue, please consult ROTOFLUID engineering department. ROTOFLUID will assist and advice users about correct use of ROTOFLUID joints and about problems that are sent to our engineering department.

TESTING:
All ROTOFLUID joints are tested before shipment. Tests assure that all products manufactured by ROTOFLUID are operational and can be assembled reliably.

WARRANTY:
From the date of shipment, ESZ Makina provides a limited one-year warranty on materials and workmanship for its products unless otherwise stated. Products must be returned to ESZ Makina undismantled, freight pre-paid. ESZ Makina's liability is expressly limited to rebuild or replacement of any product proven defective from the technical department. The warranty is void if the product is dismantled, modified, altered, damaged from improper maintenance, side loading, excessive temperature, abrasive or chemical action or improper use. No warranty is extended beyond that stated above.

LUBRICATION:
All micro-lapped seal surfaces are lubricated with the inter-passing fluid. For this reason, unless specified as "dry run"; all ROTOFLUID joints must not be run dry for a long period. Depending on the ROTOFLUID model and application parameters, all ROTOFLUID products are lubricated for life or lubricated periodically.

FILTERING:
The life of the rotating joints is affected by quality of the fluids. ROTOFLUID recommends 60µm filtering. Increasing the quality of the fluid will increase service life of the rotating joint.

MAINTANENCE:
ROTOFLUID recommends to use original spare parts. All ROTOFLUID products can be repaired in the field by using original spare parts. All ROTOFLUID products can also be repaired by the factory. All factory repaired joints have new union warranty.

THREAD TYPES USED IN THIS CATALOGUE			
SYMBOL	DEFINITION	SYMBOL	DEFINITION
NPT	American National Tapered Thread	BSPP	ISO 228 (DIN256) Pipe Thread (Straight Male, Straight Female Thread)
UNF	Unified National Fine Thread	BSP	ISO 7/1 (DIN2999) Pipe Thread (Tapered Male, Straight Female Thread)
UNS	Unified National Special Thread	RH OR LH	Right Hand or Left Hand
M18	Iso Metric Thread	PT	With Plot

	SI	USA	D	E	F	I	NL	S	COVERSION FACTORS
SPEED	1/s	RPM	min^{-1}	r.p.m.	t/min	g/min	min^{-1}	min^{-1}	1 RPM = min^{-1} = 1/60 h
TEMPERATURE	K (Kelvin)	°F	°C	°C	°C	°C	°C	°C	(°F-32)5/9 = °C = K+273
PRESSURE	Pa	PSI	bar	bar	bar	bar	bar	bar	14.5 PSI = 1 bar = 1.02 kg/cm² = 100kPa
VACUUM	Pa	"Hg	kPa	cmHg	cmHg	kPa	bara	kPA	28" Hga(Vac) = 2"Hg = 5.08cmHg = 6.75 kPa = 0.07 bara
WEIGHT	kg	lbs	kg	kg	kg	kg	kg	kg	2.2 lbs = 1.0 kg

COMPANY NAME : .....

ADRESS : .....

.....

.....

TEL : ..... FAX : .....

CONTACT : ..... JOB : .....

SIZE : ..... or FLOW RATE : .....

CONNECTION TYPE : THREADED SHAFT ☐ FLANGE SHAFT ☐

IF THREADED SHAFT; SIZE : ..... THREAD TYPE ☐ NPT ☐ BSP ☐ BSPP ☐ UNF ☐ METRIC

DIRECTION ☐ RIGHT HAND ☐ LEFT HAND

PRESSURE : ..... BAR or ..... PSI

TEMPERATURE: ..... °C or ..... °F

Does presure or temperature change during operation? If yes, please give max. and min. and describe: .....

.....

SPEED : ..... RPM(MIN^{-1}) : ..... CYLINDER DIAMETER : .....

DOES DIRECTION CHANGE ? .....

MEDIUM : ☐ WATER ☐ STEAM ☐ HOT OIL ☐ HYDRAULIC ☐ PNEUMATIC or OTHER

If medium is corrosive, flammable, explosive or toxic, please explain : .....

.....

.....

Flow Type: Single Flow ☐ Dual Flow ☐ Multiport ☐

If Dual Flow: Syphon Size : ..... and type : ☐ Stationary Syphon ☐ Rotary Syphon

If Stationary : Threaded ☐ Tube ☐ If Threaded; Thread Type : ☐ NPT ☐ BSP (ISO228-Gas Thread)

☐ Other

If Multiport; Number of ports : ..... Port Size : .....

For rod supported joints; Rod spacing (N) ..... Rod Diameter (O) : .....

If Compensator? Yes ☐ No ☐

How many are being used now? .....Potential Usage? .....

If other brands are used now;

Brand name : .....

Model : .....

Problems?.....

Any information about the application? Send drawing if possible.

.....

.....

.....

.....

If you have any questions or need assitance please call our saled engineers.

OTHER PRODUCTS

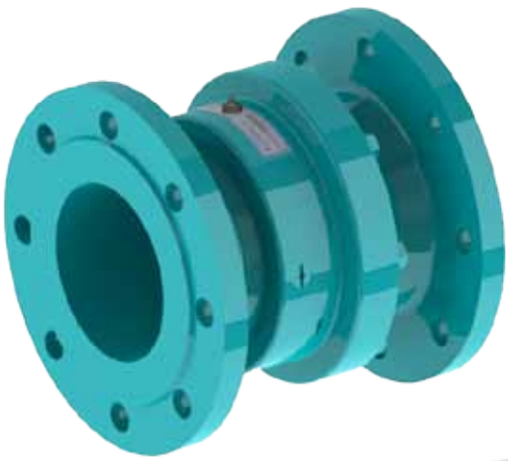

SWIVEL JOINTS

ROTOFLUID swivel joints are used when there is a need for a movable pipe connection system between two equipment parts. Swivel joints provide reliable and safe operation when transferring the product under extreme application parameters. In addition to loads caused by internal pressure; **ROTOFLUID** swivel joints absorb external, radial, axial and bending forces. The maximum load of a joint depends on many operational factors.

ROTOFLUID swivel joints are used in

*Loading arms
*Flexible piping systems
*Hose reels
*Floating roof drains

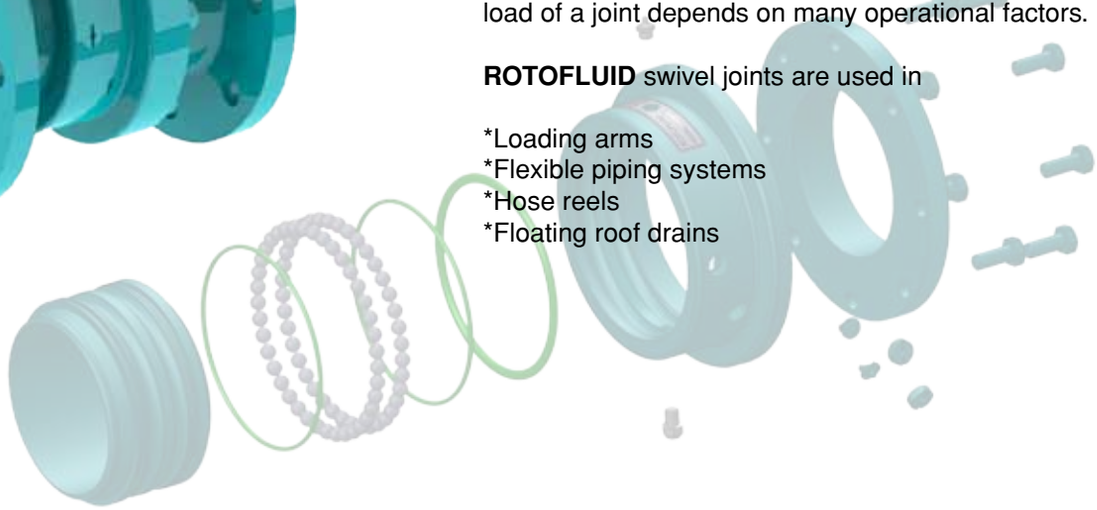

BALL JOINTS

ROTOFLUID ball joints are used when there is a need for a movable pipe-connection system between two equipment parts. Ball joints provide reliable and safe operation when transferring the product under extreme application parameters. In addition to loads caused by internal pressure; **ROTOFLUID** ball joints absorb external, radial, axial and bending forces. The maximum permissible load of a joint depends on many operational factors.

Temperature change, ground sinkage, earthquake and other factors cause pipelines to expand, contradict, shifting of axes, to bend, to twist. Ball joints can absorb these displacements.

ROTOFLUID ball joints are used in petroleum refineries, oil production, chemical process plants, industrial power plants, transportation terminals and in various sectors.

ROTOFLUID ball joints are used in
- Flexible piping systems
- Stationary piping to moving equipment
- Moving piping to stationary equipment
- Storage tank connections
- Long piping systems where temperature causes linear thermal expansion/contradiction

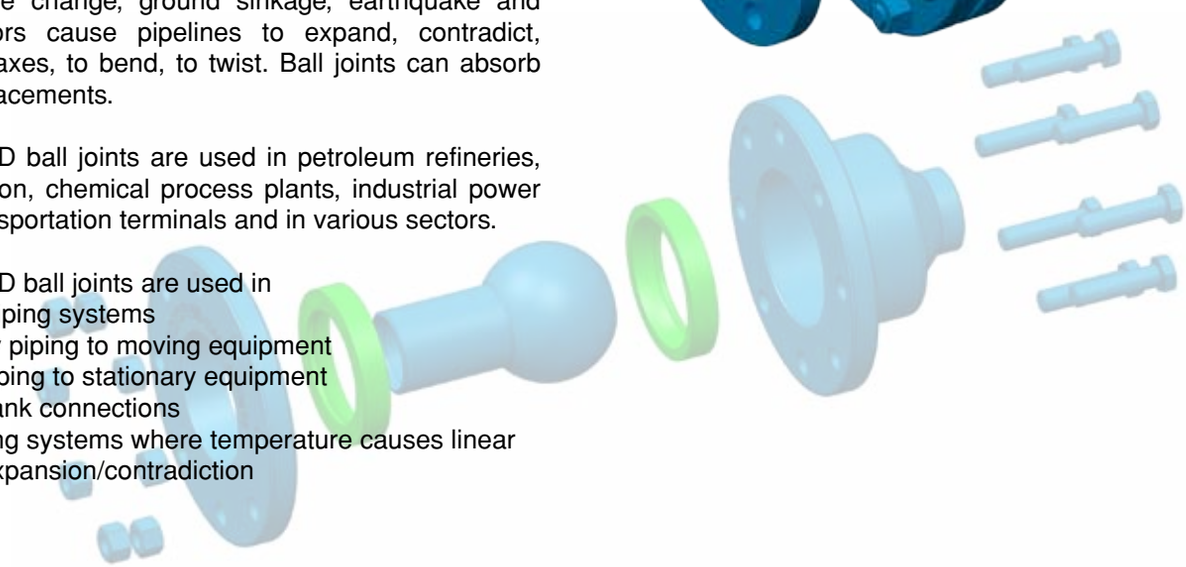

ROTOFLUID®

SERVING THE WORLD
- ROTARY JOINTS
- SWIVEL JOINTS
- BALL JOINTS

DISTRIBUTOR

ESZ MAKİNA İNŞAAT
SAN. VE DIŞ TİC. LTD. STİ.

Perpa Tic. Merk. A blok Kat:11 No:1354
Okmeydanı - Istanbul - Türkiye

+90 212 210 52 07 / 08
+90 212 210 52 09
info@eszmakina.com
www.eszmakina.com
www.rotofluid.com.tr

KOSGEB
www.kosgeb.gov.tr
Basım Tarihi: 29/05/2015
www.mercanmatbaa.com.tr